HINDU – SAMAJ TEMPLE

ROCHESTER, MINNESOTA

PRELIMINARY DEVELOPMENT PLANS

FOR

HINDU–SAMAJ TEMPLE OF MINNESOTA, INC.

911 11TH AVENUE NW, ROCHESTER, MN 55901

PHONE: FAX:

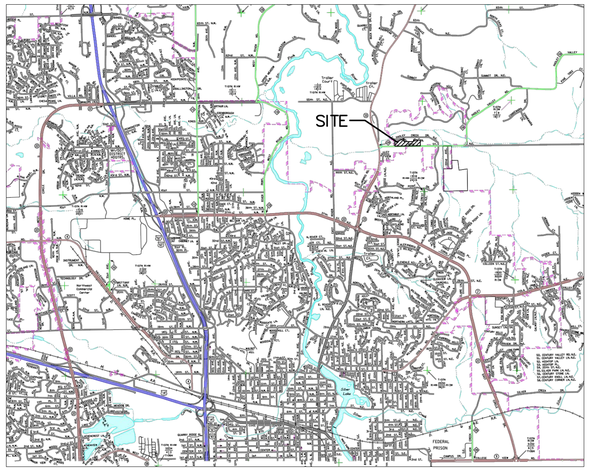

LOCATION MAP
NOT TO SCALE

PROJECT COORDINATES
N 44° 04' 21"
W 92° 26' 37"

N

INDEX

TITLE SHEET	C1.1
EXISTING CONDITIONS	C1.2
DRAINAGE MAPS	C1.3
EROSION CONTROL PLAN	C2.1
EROSION CONTROL NOTES	C2.2
GRADING & DRAINAGE PLAN	C3.1
UTILITY PLAN	C4.1
PAVING & DIMENSIONAL PLAN	C5.1
CONSTRUCTION DETAILS	C6.1–C6.2
LANDSCAPE PLAN	L1–L2

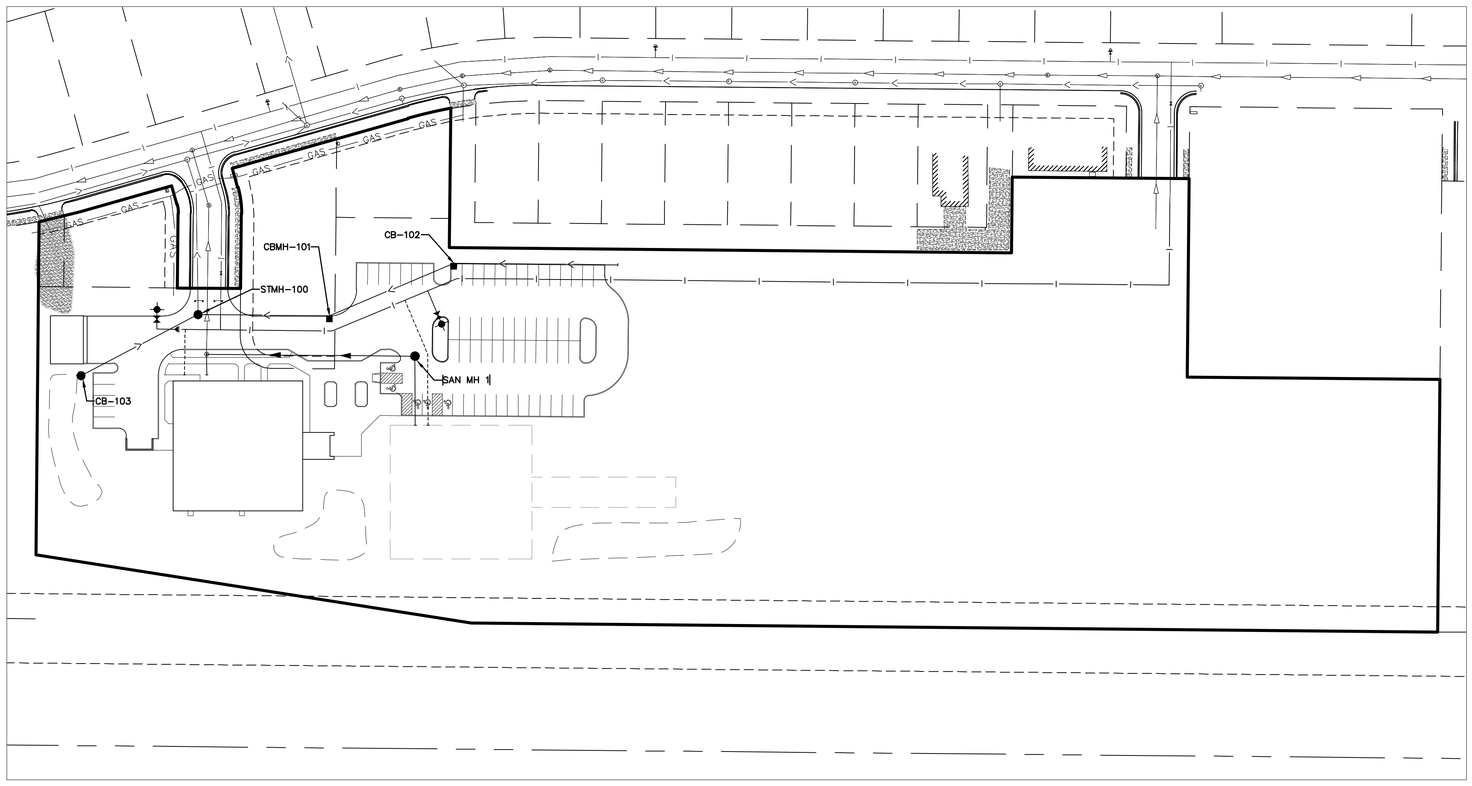

LEGEND

- EXISTING WATERMAIN
- EXISTING SANITARY SEWER
- EXISTING STORM SEWER
- EXISTING TELEPHONE PEDESTAL
- EXISTING TELEVISION PEDESTAL
- EXISTING OVERHEAD POWER LINE
- EXISTING ASPHALT SURFACE
- EXISTING CONCRETE SURFACE
- EXISTING CURB
- EXISTING CONTOUR
- SOIL BORING LOCATION
- PROPOSED CURB
- PROPOSED CONTOUR
- PROPOSED WATERMAIN
- PROPOSED SANITARY SEWER
- PROPOSED STORM SEWER
- PROPOSED CONCRETE SURFACE
- PROPOSED WIMCO–POST STORM SEWER CONSTRUCTION
- PROPOSED TEMPORARY ROCK CONSTRUCTION ENTRANCE

GOPHER STATE ONE CALL
CALL 48 HOURS BEFORE YOU DIG!
TWIN CITY AREA 651–454–0002
MN. TOLL FREE 1–800–252–1166

PROJECT CONTACTS

PROJECT ENGINEER:	JOEL COOPER, P.E. – JAMES R. HILL, INC.	(952)–890–6044 (O) (612)–508–6480 (C)
DEVELOPER:	HINDU–SAMAJ TEMPLE OF MINNESOTA, INC.	(XXX)–XXX–XXXX (O)
CITY ENGINEER:	JAMES R. MCINTOSH, P.E.– CITY ENGINEER	(585)–428–6828 (O)
NPDES OFFICER:	ROBERTA GETMAN – MPCA	(507)–206–2629 (O)
GENERAL CONTRACTOR REPRESENTATIVE:	TBD	(XXX)–XXX–XXXX (X)

N

SCALE IN FEET
0 60 120 180
1 inch = 60 feet

James R. Hill, Inc.
PLANNERS / ENGINEERS / SURVEYORS
2500 W. Cty. Rd. 42, Suite 120, Burnsville, MN 55337
PHONE: (952)890–6044 FAX: (952)890–6244

I hereby certify that this plan, specification, or report was prepared by me or under my direct supervision and that I am a duly Licensed Professional Engineer under the laws of the State of Minnesota.
JOEL G. COOPER
Date: 03/29/16 Reg.No. 18495

HINDU SAMAJ TEMPLE
ROCHESTER, MINNESOTA
TITLE SHEET
FOR
HINDU–SAMAJ TEMPLE OF MINNESOTA, INC.
911 11TH AVENUE NW, ROCHESTER, MN 55901

DRAWN BY EPF
DATE 04/19/16
REVISIONS
CAD FILE 23262–TS
PROJECT NO. 23262
C1.1

F:\Civil 3D Projects\23262\PRE-PLAT PLANS\23262-TS.dwg – 4/20/2016 08:53AM

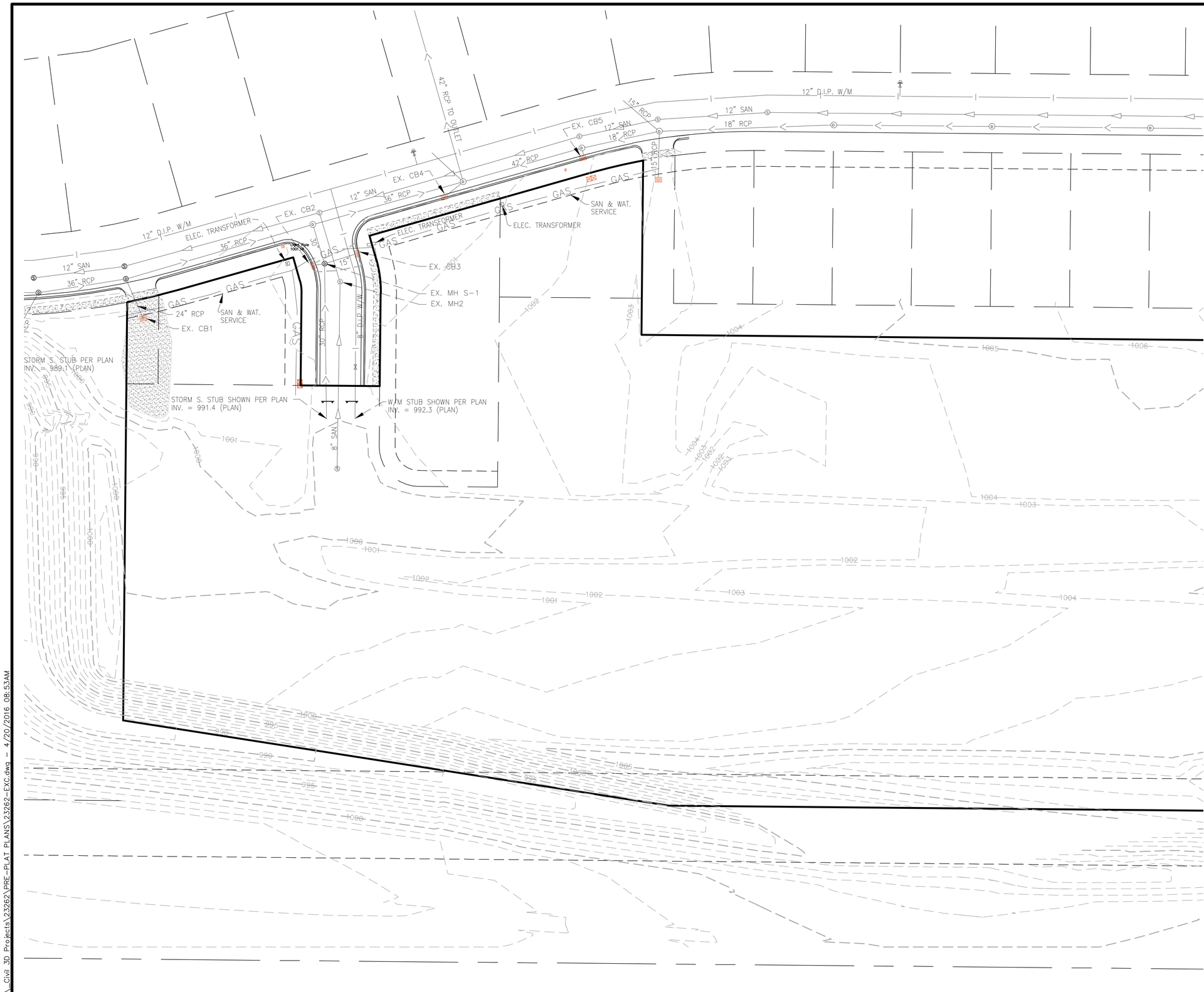

LEGEND

- EXISTING WATERMAIN
- EXISTING SANITARY SEWER
- EXISTING STORM SEWER
- EXISTING TELEPHONE PEDESTAL
- EXISTING TELEVISION PEDESTAL
- EXISTING OVERHEAD POWER LINE
- EXISTING ASPHALT SURFACE
- EXISTING CONCRETE SURFACE
- EXISTING CURB
- EXISTING CONTOUR

N

SCALE IN FEET
0 30 60 90
1 inch = 30 feet

James R. Hill, Inc.
PLANNERS / ENGINEERS / SURVEYORS
2500 W. Cty. Rd. 42, Suite 120, Burnsville, MN 55337
PHONE: (952)890-6044 FAX: (952)890-6244

I hereby certify that this plan, specification or report was prepared by me or under my direct supervision and that I am a duly Licensed Professional Engineer under the laws of the State of Minnesota.

JOEL G. COOPER

Date: 03/29/16 Reg.No. 18495

HINDU SAMAJ TEMPLE

ROCHESTER, MINNESOTA

EXISTING CONDITIONS

FOR

HINDU-SAMAJ TEMPLE OF MINNESOTA, INC.

911 11TH AVENUE NW, ROCHESTER, MN 55901

DRAWN BY	EPF
DATE	04/19/16
REVISIONS	
CAD FILE	23262-EXC
PROJECT NO.	23262
	C1.2

F:_Civil 3D Projects\23262\PRE-PLAT PLANS\23262-EXC.dwg - 4/20/2016 08:53AM

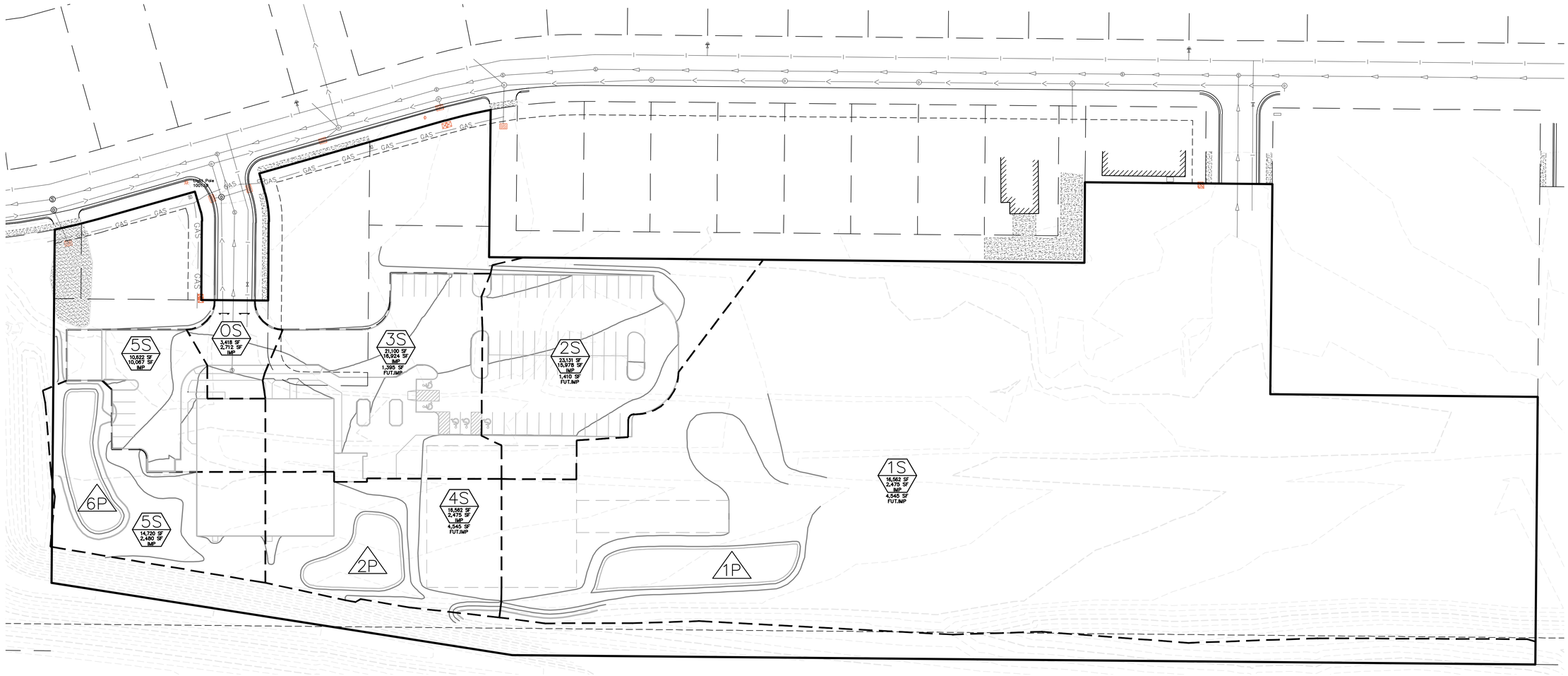

	HINDU–SAMAJ SITE	
	PROPOSED	EXISTING
Q_2–2.94"	3.75 CFS	4.86 CFS
Q_{10}–4.47"	6.15 CFS	11.67 CFS
Q_{100}–7.81"	14.57 CFS	28.89 CFS

DRAINAGE CALCULATIONS

SITE AREA – 7.69 ACRES

INFILTRATION CALCULATIONS
IMPERVIOUS SURFACE AREA – 72,181 SF (INCLUDES FUTURE BUILDING/PARKING)

INFILTRATION REQUIRED (1.0" OVER IMPERVIOUS) –
(72,181 X 1.0/12) = 6,015 CF

INFILTRATION VOLUME PROVIDED
- INFILTRATION RATE – 0.2"/HR
- MAX INFILTRATION DEPTH (48 HOURS) – 0.80'
- INFILTRATION DEPTH PROVIDED – 0.75'
- INFILTRATION VOLUME PROVIDED (TOTAL) – 7,380 CF

N

SCALE IN FEET
0 40 80 120
1 inch = 40 feet

James R. Hill, Inc.
PLANNERS / ENGINEERS / SURVEYORS
2500 W. Cty. Rd. 42, Suite 120, Burnsville, MN 55337
PHONE: (952)890-6044 FAX: (952)890-6244

I hereby certify that this plan, specification, or report was prepared by me or under my direct supervision and that I am a duly Licensed Professional Engineer under the laws of the State of Minnesota.
JOEL G. COOPER
Date: 03/29/16 Reg.No. 18495

HINDU SAMAJ TEMPLE
ROCHESTER, MINNESOTA
DRAINAGE MAP
FOR
HINDU-SAMAJ TEMPLE OF MINNESOTA, INC.
911 11TH AVENUE NW, ROCHESTER, MN 55901

DRAWN BY
EPF
DATE
04/19/16
REVISIONS

CAD FILE
23262–DRAIN
PROJECT NO.
23262
C1.3

F:_Civil 3D Projects\23262\PRE-PLAT PLANS\23262-DRAIN.dwg – 4/20/2016 08:55AM

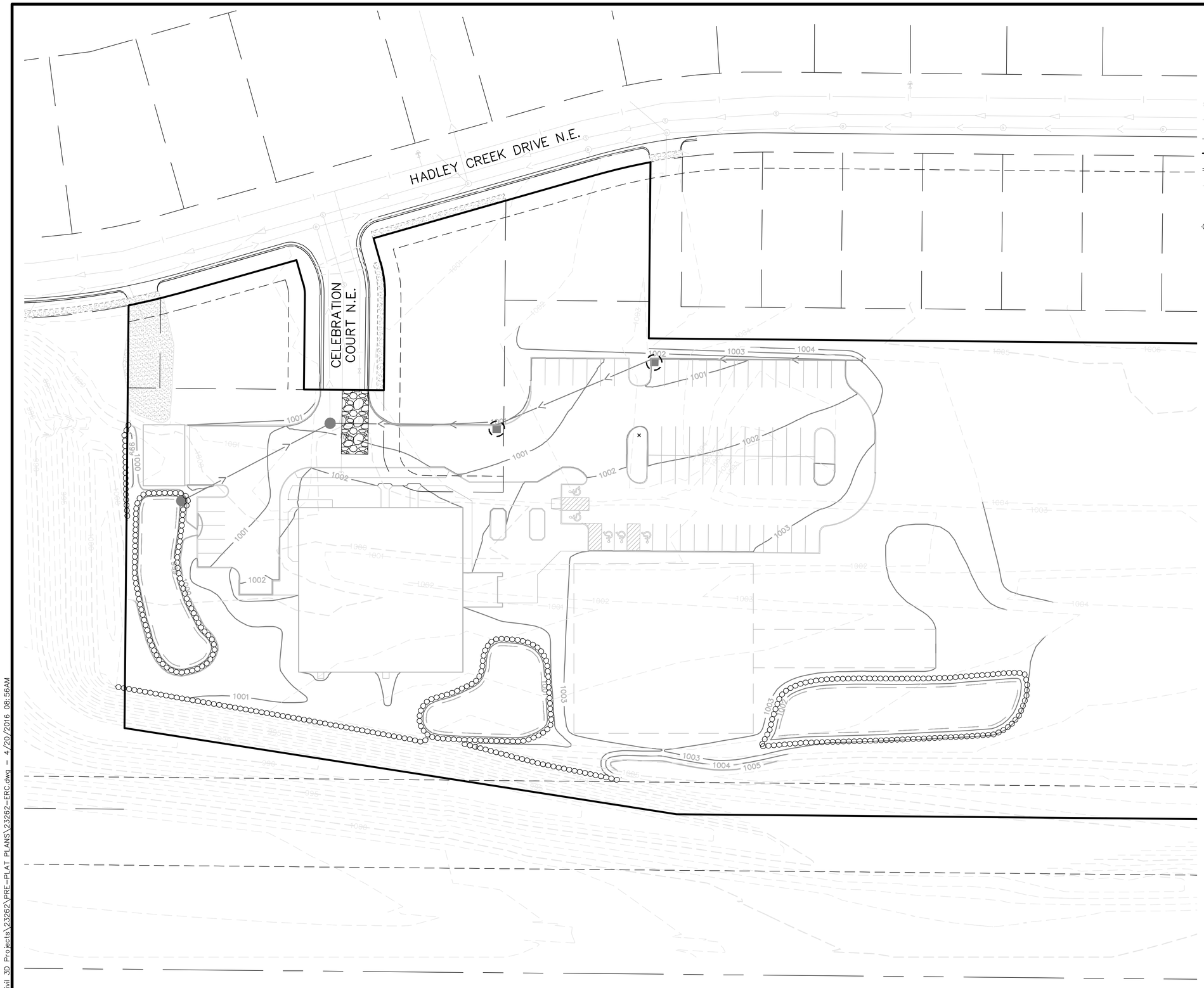

LEGEND

- EXISTING ASPHALT SURFACE
- EXISTING CONCRETE SURFACE
- PROPOSED CONCRETE SURFACE
- EXISTING CURB
- EXISTING STORM SEWER
- 1000 EXISTING CONTOURS
- 1000 PROPOSED CONTOURS
- PROPOSED CURB
- PROPOSED STORM SEWER
- PROPOSED TEMPORARY ROCK CONSTRUCTION ENTRANCE
- PROPOSED SILT FENCE
- PROPOSED CB PROTECTION –POST STORM SEWER CONSTRUCTION
- PROPOSED WIMCO–POST CONSTRUCTION

N

SCALE IN FEET
0 30 60 90
1 inch = 30 feet

James R. Hill, Inc.
PLANNERS / ENGINEERS / SURVEYORS
2500 W. Cty. Rd. 42, Suite 120, Burnsville, MN 55337
PHONE: (952)890-6044 FAX: (952)890-6244

I hereby certify that this plan, specification or report was prepared by me or under my direct supervision and that I am a duly Licensed Professional Engineer under the laws of the State of Minnesota.
JOEL G. COOPER
Date: 03/29/16 Reg.No. 18495

HINDU SAMAJ TEMPLE
ROCHESTER, MINNESOTA
EROSION & SEDIMENT CONTROL PLAN
FOR
HINDU-SAMAJ TEMPLE OF MINNESOTA, INC.
911 11TH AVENUE NW, ROCHESTER, MN 55901

DRAWN BY	EPF
DATE	04/19/16
REVISIONS	
CAD FILE	23262–ERC
PROJECT NO.	23262
	C2.1

F:_Civil 3D Projects\23262\PRE-PLAT PLANS\23262-ERC.dwg – 4/20/2016 08:56AM

NPDES REQUIREMENTS

II.B. APPLICATION AND DURATION OF COVERAGE

1. Application Required.
   a. The owner and operator shall submit a complete and accurate on-line application form with the appropriate fee to the MPCA for each project that disturbs one (1) or more acres of land or for a common plan of development or sale that will ultimately disturb one (1) or more acres. If the applicant is not able to apply on-line, contact the MPCA for technical assistance or a waiver.
   b. For certain projects or common plans of development or sale disturbing 50 acres or more, the application must be submitted at least 30 days before the start of construction activity. This requirement pertains to projects that have a discharge point on the project that is within one mile (aerial radius measurement) of, and flows to, a special water listed in Appendix A, Part B. or waters listed as impaired under section 303(d) of the federal Clean Water Act (see the MPCA's website) where the identified pollutant(s) or stressor(s) are phosphorus (nutrient eutrophication biological indicators), turbidity, dissolved oxygen, or biotic impairment (fish bioassessment, aquatic plant bioassessment and aquatic macroinvertebrate bioassessment). Applicants of projects listed in this part must submit a complete and accurate application form and SWPPP including all calculations for the Permanent Stormwater Management System (see Parts III.A.-D.).

2. All persons meeting the definition of owner and operator are Permittees and must be listed on the application. The owner is responsible for compliance with all terms and conditions of this permit. The operator is responsible for compliance with Parts II.B, II.C, III.B-F, IV, V, and applicable construction activity requirements found in Appendix A, Part C. of this permit and is jointly responsible with the owner for compliance with those portions of the permit.

3. Permit Coverage Effective Date: The commencement of any construction activity (e.g., land disturbing activities) covered under Part I.A. of this permit is prohibited until permit coverage under this permit is effective.
   a. For projects listed in Part II.B.1.a. permit coverage will become effective seven (7) calendar days after the electronic submittal date or the postmarked date of a complete application form.
   b. For projects listed in Part II.B.1.b. permit coverage will become effective 30 calendar days after the electronic submittal date, the postmarked date or MPCA date stamp (whichever is first) of the complete application. For incomplete applications (e.g., lack of fees or signature) or incomplete SWPPPs (e.g., missing calculations, Best Management Practice (BMP) specifications, estimated quantities of the BMPs, or timing of BMP installation narrative), the permit becomes effective 30 calendar days after all required information is submitted.

4. Coverage Notification: Permittee(s) will be notified of coverage in a manner as determined by the Commissioner (e.g., e-mail, online notification or letter).

5. Change of Coverage: For construction projects where the owner or operator changes, (e.g., an original developer sells portions of the property to various homebuilders or sells the entire site to a new owner) the current owner and the new owner or operator shall submit a complete permit modification on a form provided by the Commissioner. The form must be submitted prior to the new owner or operator commencing construction activity on site or in no case later than 30 days after taking ownership of the property. The owner shall provide a SWPPP to the new owner and operator that specifically addresses the remaining construction activity.

II.C. TERMINATION OF COVERAGE

1. Termination of coverage when construction is complete: All Permittee(s) must submit a Notice of Termination (NOT) to the MPCA on a form provided by the Commissioner within 30 days after all activities required for Final Stabilization (see Part IV.G.) are complete. The Permittee(s)' coverage under this permit terminates at midnight on the submission date of the NOT.

2. Termination of coverage when transfer of ownership occurs: All Permittee(s) must submit a NOT on a form provided by the Commissioner within 30 days after selling or otherwise legally transferring the entire site, including permit responsibility for roads (e.g., street sweeping) and stormwater infrastructure final clean out, or transferring portions of a site to another party. The Permittee(s)' coverage under this permit terminates at midnight on the submission date of the NOT.

3. Permittee(s) may terminate permit coverage prior to completion of all construction activity if all of the following conditions are met. After the permit is terminated under this Part, if there is any subsequent development on the remaining portions of the site where construction activity was not complete, new permit coverage must be obtained if the subsequent development itself or as part of the remaining common plan of development or sale will result in land disturbing activities of one (1) or more acres in size.
   a. Construction activity has ceased for at least 90 days.
   b. At least 90 percent (by area) of all originally proposed construction activity has been completed and permanent cover established on those areas.
   c. On areas where construction activity is not complete, permanent cover has been established.
   d. The site is in compliance with Part IV.G.2. and Part IV.G.3. and where applicable, Part IV.G.4. or Part IV.G.5.

4. Permittee(s) may terminate coverage upon approval by the MPCA if information is submitted to the MPCA documenting that termination is appropriate because the project is cancelled.

III.B. SWPPP AMENDMENTS

The Permittee(s) must amend the SWPPP as necessary to include additional requirements, such as additional or modified BMPs that are designed to correct problems identified or address situations whenever:

1. There is a change in design, construction, operation, maintenance, weather or seasonal conditions that has a significant effect on the discharge of pollutants to surface waters or underground waters.

2. Inspections or investigations by site owner or operators, USEPA or MPCA officials indicate the SWPPP is not effective in eliminating or significantly minimizing the discharge of pollutants to surface waters or underground waters or that the discharges are causing water quality standard exceedances (e.g., nuisance conditions as defined in Minn. R. 7050.0210, subp. 2).

3. The SWPPP is not achieving the general objectives of minimizing pollutants in stormwater discharges associated with construction activity, or the SWPPP is not consistent with the terms and conditions of this permit.

4. At any time after permit coverage is effective, the MPCA may determine that the project's stormwater discharges may cause, have reasonable potential to cause, or contribute to non-attainment of any applicable water quality standard, or that the SWPPP does not incorporate the applicable requirements in Part III.A.8., (Impaired Waters and TMDLs). If a water quality standard changes during the term of this permit, the MPCA will make a determination as to whether a modification of the SWPPP is necessary to address the new standard. If the MPCA makes such determination(s) or any of the determinations in Parts III.B.1.-3., the MPCA will notify the Permittee(s) in writing. In response, the Permittee(s) must amend the SWPPP to address the identified concerns and submit information requested by the MPCA, which may include an individual permit application. If the MPCA's written notification requires a response, failure to respond within the specified timeframe constitutes a permit violation.

III.E RECORD RETENTION

The SWPPP (original or copies) including, all changes to it, and inspections and maintenance records must be kept at the site during construction by the Permittee(s) who has/have operational control of that portion of the site. The SWPPP can be kept in either the field office or in an on-site vehicle during normal working hours. All owner(s) must keep the following records on file for three (3) years after submittal of the NOT as outlined in Part II.C. This does not include any records after submittal of the NOT.

1. The final SWPPP

2. Any other stormwater related permits required for the project

3. Records of all inspection and maintenance conducted during construction (Part IV.E. Inspections and Maintenance)

4. All permanent operation and maintenance agreements that have been implemented, including all right-of-way, contracts, covenants and other binding requirements regarding perpetual maintenance and

5. All required calculations for design of the temporary and permanent Stormwater Management Systems.

III.F. TRAINING REQUIREMENTS

The Permittee(s) shall ensure the following individuals identified in this part have been trained in accordance with this Permit's training requirements.

1. Who must be trained:
   a. Individual(s) preparing the SWPPP for the project
   b. Individual(s) overseeing implementation of, revising, and amending the SWPPP and individual(s) performing inspections as required in Part IV.E. One of these individual(s) must be available for an onsite inspection within 72 hours upon request by the MPCA.
   c. Individual(s) performing or supervising the installation, maintenance and repair of BMPs. At least one individual on a project must be trained in these job duties.

2. Training content: The content and extent of training must be commensurate with the individual's job duties and responsibilities with regard to activities covered under this permit for the project. At least one individual present on the permitted project site (or available to the project site in 72 hours) must be trained in the job duties described in Part III.F.1.b. and Part III.F.1.c.

3. The Permittee(s) shall ensure that the individuals are trained by local, state, federal agencies, professional organizations, or other entities with expertise in erosion prevention, sediment control, permanent stormwater management and the Minnesota NPDES/SDS Construction Stormwater Permit. An update refresher-training must be attended every three (3) years starting three (3) years from the issuance date of this permit.

PART IV. CONSTRUCTION ACTIVITY REQUIREMENTS

IV.A. STORMWATER POLLUTION PREVENTION PLAN

The Permittee(s) must implement the SWPPP and the requirements of this part. The BMPs identified in the SWPPP and in this permit must be selected, installed, and maintained in an appropriate and functional manner that is in accordance with relevant manufacturer specifications and accepted engineering practices.

IV.B. EROSION PREVENTION PRACTICES

1. The Permittee(s) must plan for and implement appropriate BMPs such as construction phasing, vegetative buffer strips, horizontal slope grading, inspection and maintenance of Part IV.E. and other construction practices that minimize erosion as necessary to comply with this permit and protect waters of the state. The location of areas not to be disturbed must be delineated (e.g., with flags, stakes, signs, silt fence etc.) on the project site before work begins. The Permittee(s) must minimize the need for disturbance of portions of the project that have steep slopes. For those sloped areas which must be disturbed, the Permittee(s) must use techniques such as phasing and stabilization practices designed for steep slopes (e.g., slope draining and terracing).

2. The Permittee(s) must stabilize all exposed soil areas (including stockpiles). Stabilization must be initiated immediately to limit soil erosion whenever any construction activity has permanently or temporarily ceased on any portion of the site and will not resume for a period exceeding 14 calendar days. Stabilization must be completed no later than 14 calendar days after the construction activity in that portion of the site has temporarily or permanently ceased. For Public Waters that the Minnesota Department of Natural Resources has promulgated "work in water restrictions" during specified fish spawning time frames, all exposed soil areas that are within 200 feet of the water's edge, and drain to these waters must complete the stabilization activities within 24 hours during the restriction period. Temporary stockpiles without significant silt, clay or organic components (e.g., clean aggregate stockpiles, demolition concrete stockpiles, sand stockpiles) and the constructed base components of roads, parking lots and similar surfaces are exempt from this requirement but must be in compliance with Part IV.C.5.

3. If using stormwater conveyance channels , the Permittee(s) must design the channels to route water around unstabilized areas on the site and to reduce erosion, unless infeasible. The Permittee(s) must use erosion controls and velocity dissipation devices such as check dams, sediment traps, riprap, or grouted riprap at outlets within and along the length of any constructed stormwater conveyance channel, and at any outlet, to provide a non-erosive flow velocity, to minimize erosion of channels and their embankments, outlets, adjacent stream banks, slopes, and downstream waters during discharge conditions.

4. The Permittee(s) must stabilize the normal wetted perimeter of any temporary or permanent drainage ditch or swale that drains water from any portion of the construction site, or diverts water around the site, within 200 lineal feet from the property edge, or from the point of discharge into any surface water. Stabilization of the last 200 lineal feet must be completed within 24 hours after connecting to a surface water or property edge.

The Permittee(s) shall complete stabilization of the remaining portions of any temporary or permanent ditches or swales within 14 calendar days after connecting to a surface water or property edge and construction in that portion of the ditch has temporarily or permanently ceased.

Temporary or permanent ditches or swales that are being used as a sediment containment system during construction (with properly designed rock-ditch checks, bio rolls, silt dikes, etc.) do not need to be stabilized during the temporary period of its use as a sediment containment system. These areas must be stabilized within 24 hours after no longer being used as a sediment containment system. Applying mulch, hydromulch, tackifier, polyacrylamide or similar erosion prevention practices is not acceptable stabilization in any part of a temporary or permanent drainage ditch or swale.

5. Pipe outlets must be provided with temporary or permanent energy dissipation within 24 hours after connection to a surface water.

6. Unless infeasible due to lack of pervious or vegetated areas, the Permittee(s) must direct discharges from BMPs to vegetated areas of the site (including any natural buffers) in order to increase sediment removal and maximize stormwater infiltration. The Permittee(s) must use velocity dissipation devices if necessary to prevent erosion when directing stormwater to vegetated areas.

IV.C. SEDIMENT CONTROL PRACTICES

1. The Permittee(s) must employ Sediment control practices as necessary to minimize sediment from entering surface waters, including curb and gutter systems and storm sewer inlets.
   a. Temporary or permanent drainage ditches and sediment basins that are designed as part of a sediment containment system (e.g., ditches with rock-check dams) require sediment control practices only as appropriate for site conditions.
   b. If the down gradient sediment controls are overloaded (based on frequent failure or excessive maintenance requirement), the Permittee(s) must install additional upgradient sediment control practices or redundant BMPs to eliminate the overloading, and the SWPPP must be amended to identify these additional practices as required in Part III.B 1.-3.

2. Sediment control practices must be established on all down gradient perimeters and be located upgradient of any buffer zones. The perimeter sediment control practice must be in place before any upgradient land-disturbing activities begin. These practices shall remain in place until Final Stabilization has been established in accordance with Part IV.G. A floating silt curtain placed in the water is not a sediment control BMP to satisfy perimeter control requirements in this part except when working on a shoreline and below the waterline. In those cases, a floating silt curtain can be used as a perimeter control practice if the floating silt curtain is installed as close to shore as possible. Immediately after the short term construction activity (e.g. installation of rip rap along the shoreline) in that area is complete, an upland perimeter control practice must be installed if exposed soils still drain to the surface water.

3. The Permittee(s) shall re-install all sediment control practices that have been adjusted or removed to accommodate short-term activities such as clearing or grubbing, or passage of vehicles, immediately after the short-term activity has been completed. The Permittee(s) shall complete any short-term activity that requires removal of sediment control practices as quickly as possible. The Permittee(s) must re-install sediment control practices before the next precipitation event even if the short-term activity is not complete.

4. All storm drain inlets must be protected by appropriate BMPs during construction until all sources with potential for discharging to the inlet have been stabilized. Inlet protection may be removed for a particular inlet if a specific safety concern (street flooding/freezing) has been identified by the Permittee(s) or the jurisdictional authority (e.g., city/county/township/MnDOT engineer).The Permittee(s) must document the need for removal in the SWPPP.

5. Temporary soil stockpiles must have silt fence or other effective sediment controls, and cannot be placed in any natural buffers or surface waters, including stormwater conveyances such as curb and gutter systems, or conduits and ditches unless there is a bypass in place for the stormwater.

6. Where vehicle traffic leaves any part of the site (or onto paved roads within the site):
   a. The Permittee(s) must install a vehicle tracking BMP to minimize the track out of sediment from the construction site. Examples of vehicle tracking BMPs include (but are not limited to) rock pads, mud mats, slash mulch, concrete or steel wash racks, or equivalent systems.
   b. The Permittee(s) must use street sweeping if such vehicle tracking BMPs are not adequate to prevent sediment from being tracked onto the street (see Part IV.E.5.d.).

7. The Permittee(s) must install temporary sedimentation basins as required in Part III.C. of this permit.

8. The Permittee(s) must minimize soil compaction and, unless infeasible, preserve topsoil. Minimizing soil compaction is not required where the function of a specific area of the site dictates that it be compacted.

9. The Permittee(s) must preserve a 50 foot natural buffer or (if a buffer is infeasible on the site) provide redundant sediment controls when a surface water is located within 50 feet of the project's earth disturbances and stormwater flows to the surface water.Natural buffers are not required adjacent to road ditches, judicial ditches, county ditches, stormwater conveyance channels, storm drain inlets, and sediment basins. The Permittee(s) is/are not required to enhance the quality of the vegetation that already exists in the buffer or provide vegetation if none exist. However, Permittee(s) can improve the natural buffer with vegetation.

10. If the Permittee(s) intend to use polymers, flocculants, or other sedimentation treatment chemicals on the project site, the Permittee(s) must comply with the following minimum requirements:
   a. The Permittee(s) must use conventional erosion and sediment controls prior to chemical addition to ensure effective treatment. Chemicals may only be applied where treated stormwater is directed to a sediment control system which allows for filtration or settlement of the floc prior to discharge.
   b. Chemicals must be selected that are appropriately suited to the types of soils likely to be exposed during construction, and to the expected turbidity, pH, and flow rate of stormwater flowing into the chemical treatment system or area.
   c. Chemicals must be used in accordance with accepted engineering practices, and with dosing specifications and sediment removal design specifications provided by the manufacturer or provider/supplier of the applicable chemicals.

IV.D. DEWATERING AND BASIN DRAINING

1. The Permittee(s) must discharge turbid or sediment-laden waters related to dewatering or basin draining (e.g., pumped discharges, trench/ditch cuts for drainage) to a temporary or permanent sedimentation basin on the project site unless infeasible. The Permittee(s) may discharge from the temporary or permanent sedimentation basins to surface waters if the basin water has been visually checked to ensure adequate treatment has been obtained in the basin and that nuisance conditions (see Minn. R. 7050.0210, subp. 2) will not result from the discharge. If the water cannot be discharged to a sedimentation basin prior to entering the surface water, it must be treated with the appropriate BMPs, such that the discharge does not adversely affect the receiving water or downstream properties. If the Permittee(s) must discharge water that contains oil or grease, the Permittee(s) must use an oil-water separator or suitable filtration device (e.g. cartridge filters, absorbents pads) prior to discharging the water. The Permittee(s) must ensure that discharge points are adequately protected from erosion and scour. The discharge must be dispersed over natural rock riprap, sand bags, plastic sheeting, or other accepted energy dissipation measures.

2. All water from dewatering or basin-draining activities must be discharged in a manner that does not cause nuisance conditions, erosion in receiving channels or on downslope properties, or inundation in wetlands causing significant adverse impact to the wetland.

3. If the Permittee(s) is/are using filters with backwash water, the Permittee(s) must haul the backwash water away for disposal, return the backwash water to the beginning of the treatment process, or incorporate the backwash water into the site in a manner that does not cause erosion. The Permittee(s) may discharge backwash water to the sanitary sewer if permission is granted by the sanitary sewer authority. The Permittee(s) must replace and clean the filter media used in dewatering devices when required to retain adequate function.

IV.E. INSPECTIONS AND MAINTENANCE

1. The Permittee(s) must ensure that a trained person (as identified in Part III.A.3.a.) will routinely inspect the entire construction site at least once every seven (7) days during active construction and within 24 hours after a rainfall event greater than 0.5 inches in 24 hours. Following an inspection that occurs within 24 hours after a rainfall event, the next inspection must be conducted within seven (7) days after the rainfall event.

2. All inspections and maintenance conducted during construction must be recorded within 24 hours in writing and these records must be retained with the SWPPP in accordance with Part III.E. Records of each inspection and maintenance activity shall include:
   a. Date and time of inspections
   b. Name of person(s) conducting inspections
   c. Findings of inspections, including the specific location where corrective actions are needed
   d. Corrective actions taken (including dates, times, and party completing maintenance activities)
   e. Date and amount of all rainfall events greater than 1/2 inch (0.5 inches) in 24 hours. Rainfall amounts must be obtained by a properly maintained rain gauge installed onsite, a weather station that is within 1 mile of your location or a weather reporting system that provides site specific rainfall data from radar summaries.
   f. If any discharge is observed to be occurring during the inspection, a record of all points of the property from which there is a discharge must be made, and the discharge should be described (i.e., color, odor, floating, settled, or suspended solids, foam, oil sheen, and other obvious indicators of pollutants) and photographed.
   g. Any amendments to the SWPPP proposed as a result of the inspection must be documented as required in Part III.B. within seven (7) calendar days.

3. Inspection frequency adjustment
   a. Where parts of the project site have permanent cover, but work remains on other parts of the site, the Permittee(s) may reduce inspections of the areas with permanent cover to once per month.
   b. Where construction sites have permanent cover on all exposed soil areas and no construction activity is occurring anywhere on the site, the site must be inspected during non-frozen ground conditions at least once per month for a period of twelve (12) months. Following the twelfth month of permanent cover and no construction activity, inspections may be terminated until construction activity is once again initiated unless the Permittee(s) is/are notified in writing by the MPCA that erosion issues have been detected at the site and inspections need to resume.
   c. Where work has been suspended due to frozen ground conditions, the inspections may be suspended. The required inspections and maintenance schedule must begin within 24 hours after runoff occurs at the site or 24 hours prior to resuming construction, whichever comes first.

4. The Permittee(s) is/are responsible for the inspection and maintenance of temporary and permanent water quality management BMPs, as well as all erosion prevention and sediment control BMPs, until another Permittee has obtained coverage under this Permit according to Part II.B.5. or the project has undergone Final Stabilization, and an NOT has been submitted to the MPCA.

5. The Permittee(s) must inspect all erosion prevention and sediment control BMPs and Pollution Prevention Management Measures to ensure integrity and effectiveness during all routine and post-rainfall event inspections. All nonfunctional BMPs must be repaired, replaced, or supplemented with functional BMPs by the end of the next business day after discovery, or as soon as field conditions allow access unless another time frame is specified below. The Permittee(s) must investigate and comply with the following inspection and maintenance requirements:
   a. All perimeter control devices must be repaired, replaced, or supplemented when they become nonfunctional or the sediment reaches one-half (1/2) of the height of the device. These repairs must be made by the end of the next business day after discovery, or thereafter as soon as field conditions allow access.
   b. Temporary and permanent sedimentation basins must be drained and the sediment removed when the depth of sediment collected in the basin reaches one-half (1/2) the storage volume. Drainage and removal must be completed within 72 hours of discovery, or as soon as field conditions allow access (see Part IV.D.).
   c. Surface waters, including drainage ditches and conveyance systems, must be inspected for evidence of erosion and sediment deposition during each inspection. The Permittee(s) must remove all deltas and sediment deposited in surface waters, including drainage ways, catch basins, and other drainage systems, and restabilize the areas where sediment removal results in exposed soil. The Permittee(s) must take place within seven (7) days of discovery unless precluded by legal, regulatory, or physical access constraints. The Permittee(s) shall use all reasonable efforts to obtain access. If precluded, removal and stabilization must take place within seven (7) calendar days of obtaining access. The Permittee(s) is/are responsible for contacting all local, regional, state and federal authorities and receiving any applicable permits, prior to conducting any work in surface waters.
   d. Construction site vehicle exit locations must be inspected for evidence of off-site sediment tracking onto paved surfaces. Tracked sediment must be removed from all paved surfaces both on and off site within 24 hours of discovery, or if applicable, within a shorter time to comply with Part IV.C.6.
   e. Streets and other areas adjacent to the project must be inspected for evidence of off-site accumulations of sediment. If sediment is present, it must be removed in a manner and at a frequency sufficient to minimize off-site impacts (e.g., fugitive sediment in streets could be washed into storm sewers by the next rain and/or pose a safety hazard to users of public streets).

6. All infiltration areas must be inspected to ensure that no sediment from ongoing construction activity is reaching the infiltration area. All infiltration areas must be inspected to ensure that equipment is not being driven across the infiltration area.

IV.F. POLLUTION PREVENTION MANAGEMENT MEASURES

The Permittee(s) shall implement the following pollution prevention management measures on the site:

1. Storage, Handling, and Disposal of Construction Products, Materials, and Wastes: The Permittee(s) shall comply with the following to minimize the exposure to stormwater of any of the products, materials, or wastes. Products or wastes which are either not a source of contamination to stormwater or are designed to be exposed to stormwater are not held to this requirement:
   a. Building products that have the potential to leach pollutants must be under cover (e.g., plastic sheeting or temporary roofs) to prevent the discharge of pollutants or protected by a similarly effective means designed to minimize contact with stormwater.
   b. Pesticides, herbicides, insecticides, fertilizers, treatment chemicals, and landscape materials must be under cover (e.g., plastic sheeting or temporary roofs) to prevent the discharge of pollutants or protected by similarly effective means designed to minimize contact with stormwater.
   c. Hazardous materials, toxic waste, (including oil, diesel fuel, gasoline, hydraulic fluids, paint solvents, petroleum-based products, wood preservatives, additives, curing compounds, and acids) must be properly stored in sealed containers to prevent spills, leaks or other discharge. Restricted access storage areas must be provided to prevent vandalism. Storage and disposal of hazardous waste or hazardous materials must be in compliance with Minn. R. ch. 7045 including secondary containment as applicable.
   d. Solid waste must be stored, collected and disposed of properly in compliance with Minn. R. ch. 7035.
   e. Portable toilets must be positioned so that they are secure and will not be tipped or knocked over. Sanitary waste must be disposed of properly in accordance with Minn. R. ch. 7041.

2. Fueling and Maintenance of Equipment or Vehicles; Spill Prevention and Response: The Permittee(s) shall take reasonable steps to prevent the discharge of spilled or leaked chemicals, including fuel, from any area where chemicals or fuel will be loaded or unloaded including the use of drip pans or absorbents unless infeasible. The Permittee(s) must conduct fueling in a contained area unless infeasible. The Permittee(s) must ensure adequate supplies are available at all times to clean up discharged materials and that an appropriate disposal method is available for recovered spilled materials. The Permittee(s) must report and clean up spills immediately as required by Minn. Stat. § 115.061, using dry clean up measures where possible.

3. Vehicle and equipment washing: If the Permittee(s) wash the exterior of vehicles or equipment on the project site, washing must be limited to a defined area of the site. Runoff from the washing area must be contained in a sediment basin or other similarly effective controls and waste from the washing activity must be properly disposed of. The Permittee(s) must properly use and store soaps, detergents, or solvents. No engine degreasing is allowed on site.

4. Concrete and other washouts waste: The Permittee(s) must provide effective containment for all liquid and solid wastes generated by washout operations (concrete, stucco, paint, form release oils, curing compounds and other construction materials) related to the construction activity. The liquid and solid washout wastes must not contact the ground, and the containment ust be designed so that it does not result in runoff from the washout operations or areas. liquid and solid wastes must be disposed of properly and in compliance with MPCA rules. A sign must be installed adjacent to each washout facility that requires site personnel to utilize the proper facilities for disposal of concrete and other washout wastes.

IV.G. FINAL STABILIZATION

The Permittee(s) must ensure Final Stabilization of the site. Final Stabilization is not complete until all requirements of Parts IV.G.1-5. are complete:

1. All soil disturbing activities at the site have been completed and all soils are stabilized by a uniform perennial vegetative cover with a density of 70 percent of its expected final growth density over the entire pervious surface area, or other equivalent means necessary to prevent soil failure under erosive conditions.

2. The permanent stormwater management system is constructed, meets all requirements in Part III.D. and is operating as designed. Temporary or permanent sedimentation basins that are to be used as permanent water quality management basins have been cleaned of any accumulated sediment. All sediment has been removed from conveyance systems and ditches are stabilized with permanent cover.

3. All temporary synthetic and structural erosion prevention and sediment control BMPs (such as silt fence) have been removed on the portions of the site for which the Permittee(s) is/are responsible. BMPs designed to decompose on site (such as some compost logs) may be left in place.

4. For residential construction only, individual lots are considered finally stabilized if the structure(s) are finished and temporary erosion protection and downgradient perimeter control has been completed and the residence has been sold to the homeowner. Additionally, the Permittee has distributed the MPCA's "Homeowner Fact Sheet" to the homeowner to inform the homeowner of the need for, and benefits of, permanent cover.

5. For construction projects on agricultural land (e.g., pipelines across crop, field pasture or range land) the disturbed land has been returned to its preconstruction agricultural use.

James R. Hill, Inc.
PLANNERS / ENGINEERS / SURVEYORS
2500 W. Cty. Rd. 42, Suite 120, Burnsville, MN 55337
PHONE: (952)890-6044 FAX: (952)890-6244

I hereby certify that this plan, specification, or report was prepared by me or under my direct supervision and that I am a duly Licensed Professional Engineer under the laws of the State of Minnesota.
JOEL G. COOPER
Date: 03/29/16 Reg.No. 18495

HINDU SAMAJ TEMPLE
ROCHESTER, MINNESOTA
EROSION & SEDIMENT CONTROL DETAILS
FOR
HINDU-SAMAJ TEMPLE OF MINNESOTA, INC.
911 11TH AVENUE NW, ROCHESTER, MN 55901

DRAWN BY	EPF
DATE	04/19/16
REVISIONS	
CAD FILE	23262-ERD
PROJECT NO.	23262
	C2.2

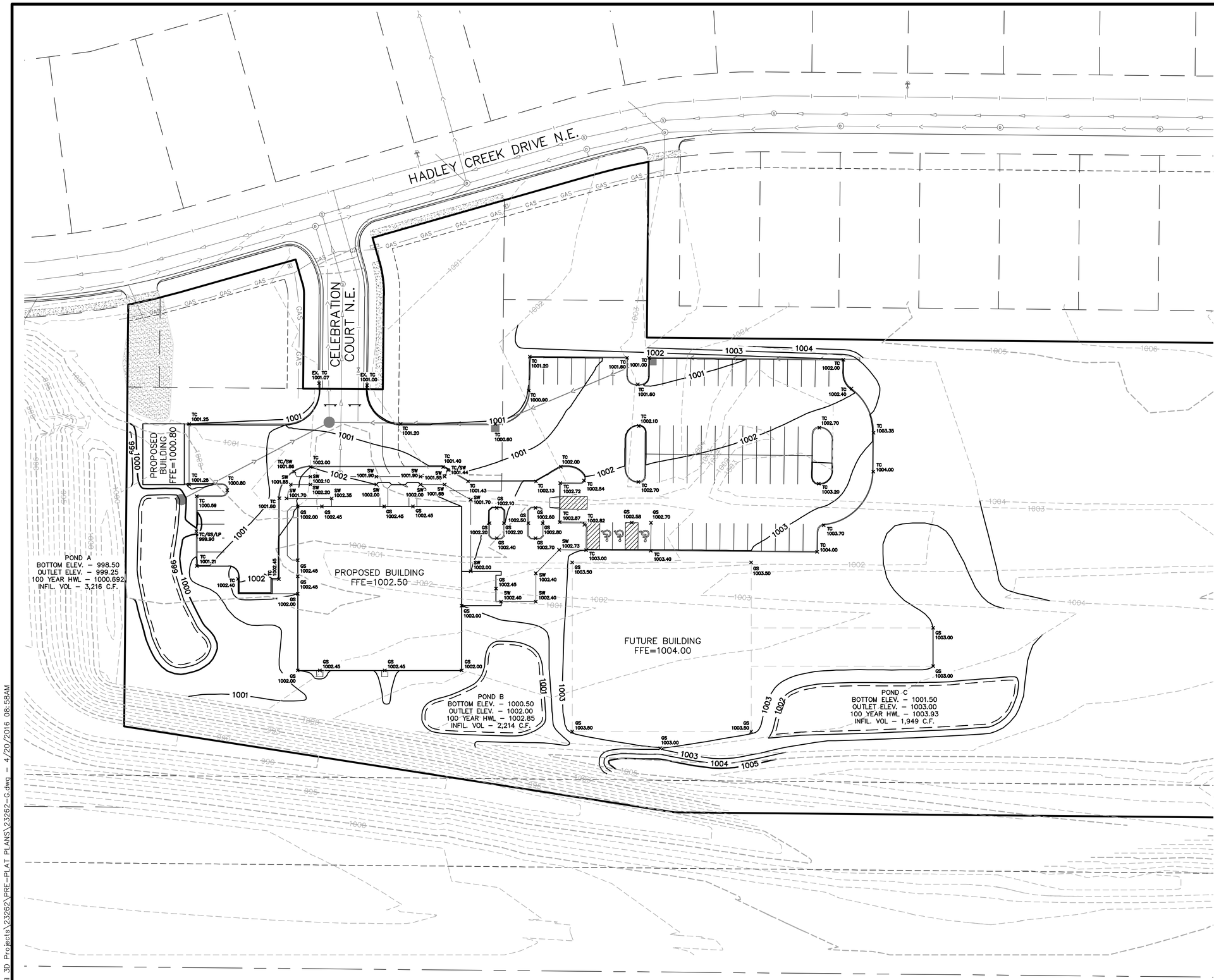

LEGEND

- EXISTING ASPHALT SURFACE
- EXISTING CONCRETE SURFACE
- PROPOSED CONCRETE SURFACE
- EXISTING CURB
- 1000 EXISTING CONTOURS
- 1000 PROPOSED CONTOURS
- PROPOSED CURB

N

SCALE IN FEET
0 30 60 90
1 inch = 30 feet

James R. Hill, Inc.
PLANNERS / ENGINEERS / SURVEYORS
2500 W. Cty. Rd. 42, Suite 120, Burnsville, MN 55337
PHONE: (952)890-6044 FAX: (952)890-6244

I hereby certify that this plan, specification or report was prepared by me or under my direct supervision and that I am a duly Licensed Professional Engineer under the laws of the State of Minnesota.
JOEL G. COOPER
Date: 03/29/16 Reg.No. 18495

HINDU SAMAJ TEMPLE
ROCHESTER, MINNESOTA
GRADING & DRAINAGE PLAN
FOR
HINDU-SAMAJ TEMPLE OF MINNESOTA, INC.
911 11TH AVENUE NW, ROCHESTER, MN 55901

DRAWN BY	EPF
DATE	04/19/16
REVISIONS	
CAD FILE	23262-G
PROJECT NO.	23262
	C3.1

F:_Civil 3D Projects\23262\PRE-PLAT PLANS\23262-G.dwg – 4/20/2016 08:58AM

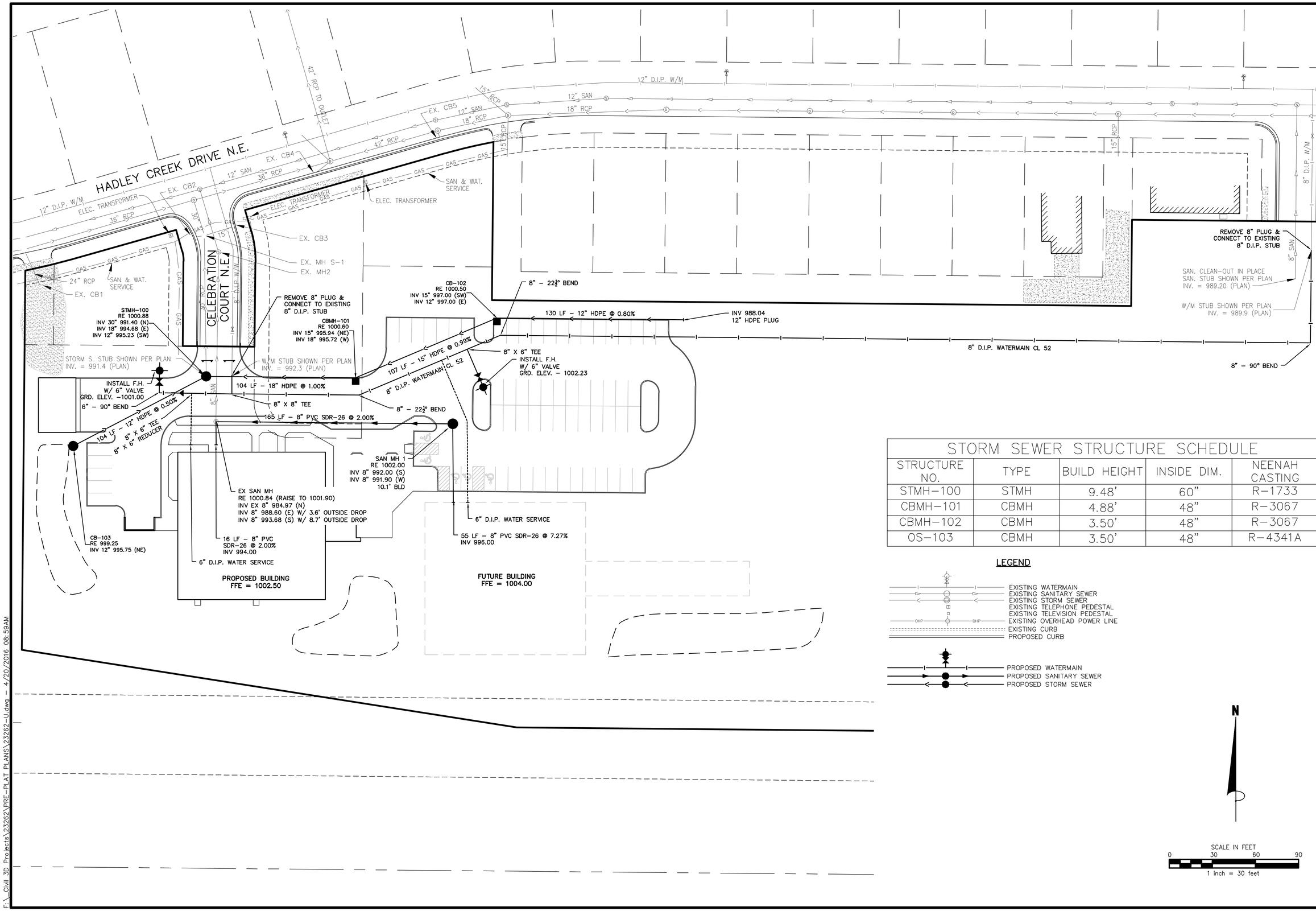

STORM SEWER STRUCTURE SCHEDULE

STRUCTURE NO.	TYPE	BUILD HEIGHT	INSIDE DIM.	NEENAH CASTING
STMH-100	STMH	9.48'	60"	R-1733
CBMH-101	CBMH	4.88'	48"	R-3067
CBMH-102	CBMH	3.50'	48"	R-3067
OS-103	CBMH	3.50'	48"	R-4341A

LEGEND

- EXISTING WATERMAIN
- EXISTING SANITARY SEWER
- EXISTING STORM SEWER
- EXISTING TELEPHONE PEDESTAL
- EXISTING TELEVISION PEDESTAL
- EXISTING OVERHEAD POWER LINE
- EXISTING CURB
- PROPOSED CURB
- PROPOSED WATERMAIN
- PROPOSED SANITARY SEWER
- PROPOSED STORM SEWER

N

SCALE IN FEET
0 30 60 90
1 inch = 30 feet

James R. Hill, Inc.
PLANNERS / ENGINEERS / SURVEYORS
2500 W. Cty. Rd. 42, Suite 120, Burnsville, MN 55337
PHONE: (952)890-6044 FAX: (952)890-6244

I hereby certify that this plan, specification or report was prepared by me or under my direct supervision and that I am a duly Licensed Professional Engineer under the laws of the State of Minnesota.
JOEL G. COOPER
Date: 03/29/16 Reg.No. 18495

HINDU SAMAJ TEMPLE
ROCHESTER, MINNESOTA
UTILITY PLAN
FOR
HINDU-SAMAJ TEMPLE OF MINNESOTA, INC.
911 11TH AVENUE NW, ROCHESTER, MN 55901

DRAWN BY
EPF

DATE
04/19/16

REVISIONS

CAD FILE
23262-U

PROJECT NO.
23262

C4.1

E:_Civil 3D Projects\23262\PRE-PLAT PLANS\23262-U.dwg - 4/20/2016 08:59AM

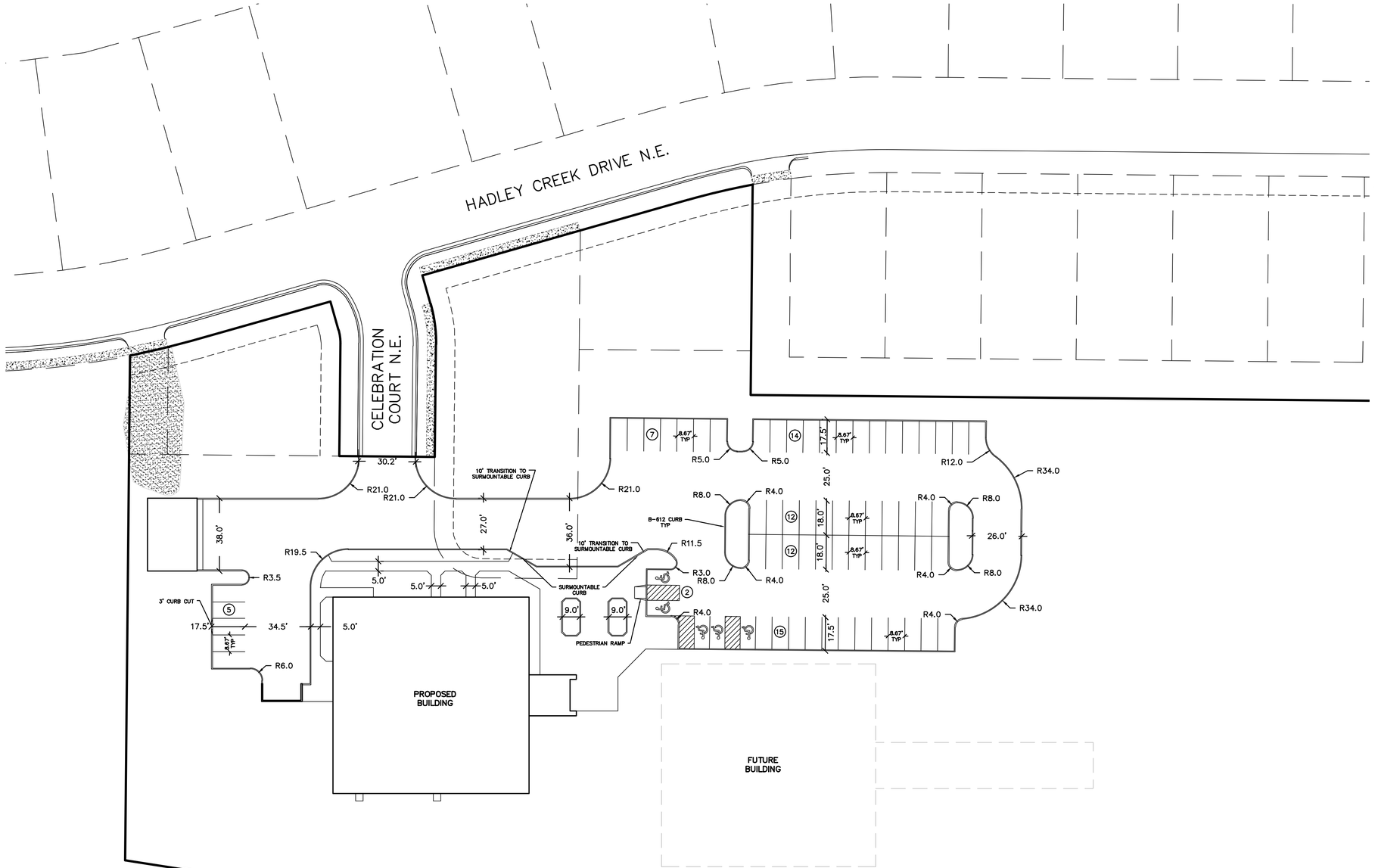

LEGEND

- EXISTING ASPHALT SURFACE
- EXISTING CONCRETE SURFACE
- PROPOSED CONCRETE SURFACE
- EXISTING CURB
- PROPOSED CURB

OVERALL SITE DATA

CURRENT ZONING	SPECIAL DISTRICT – SD
SITE ADDRESS	TBD
PROPOSED USE	WORSHIP CENTER
NET BUILDABLE AREA:	7.69 AC
PROVIDED OFF-STREET PARKING:	67 SPACES TOTAL (62 REGULAR/5 ADA)

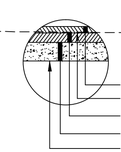

PARKING LOT PAVEMENT SECTION

N

SCALE IN FEET
0 30 60 90
1 inch = 30 feet

James R. Hill, Inc.
PLANNERS / ENGINEERS / SURVEYORS
2500 W. Cty. Rd. 42, Suite 120, Burnsville, MN 55337
PHONE: (952)890-6044 FAX: (952)890-6244

I hereby certify that this plan, specification or report was prepared by me or under my direct supervision and that I am a duly Licensed Professional Engineer under the laws of the State of Minnesota.
JOEL G. COOPER
Date: 03/29/16 Reg.No. 18495

HINDU SAMAJ TEMPLE
ROCHESTER, MINNESOTA
PAVING & DIMENSIONAL PLAN
FOR
HINDU-SAMAJ TEMPLE OF MINNESOTA, INC.
911 11TH AVENUE NW, ROCHESTER, MN 55901

DRAWN BY	EPF
DATE	04/19/16
REVISIONS	
CAD FILE	23262-PAV
PROJECT NO.	23262
	C5.1

F:_Civil 3D Projects\23262\PRE-PLAT PLANS\23262-PAV.dwg – 4/20/2016 09:00AM

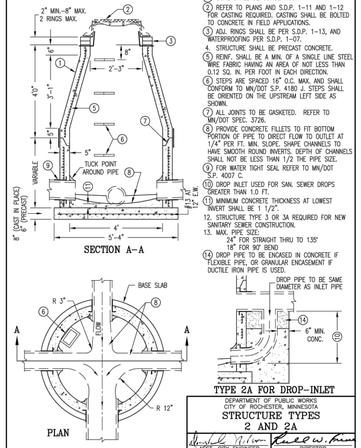

NOTES

1. CONE SHALL BE CONCENTRIC.
2. REFER TO PLANS AND S.D.P. 1–11 AND 1–12 FOR CASTING REQUIRED. CASTING SHALL BE BOLTED TO CONCRETE IN FIELD APPLICATIONS.
3. ADJ. RINGS SHALL BE PER S.D.P. 1–13, AND WATERPROOFING PER S.D.P. 1–07.
4. STRUCTURE SHALL BE PRECAST CONCRETE.
5. REINF. SHALL BE A MIN. OF A SINGLE LINE STEEL WIRE FABRIC HAVING AN AREA OF NOT LESS THAN 0.12 SQ. IN. PER FOOT IN EACH DIRECTION.
6. STEPS ARE SPACED 16" O.C. MAX. AND SHALL CONFORM TO MN/DOT S.P. 4180 J. STEPS SHALL BE ORIENTED ON THE UPSTREAM LEFT SIDE AS SHOWN.
7. ALL JOINTS TO BE GASKETED. REFER TO MN/DOT SPEC. 3726.
8. PROVIDE CONCRETE FILLETS TO FIT BOTTOM PORTION OF PIPE TO DIRECT FLOW TO OUTLET AT 1/4" PER FT. MIN. SLOPE. SHAPE CHANNELS TO HAVE SMOOTH ROUND INVERTS. DEPTH OF CHANNELS SHALL NOT BE LESS THAN 1/2 THE PIPE SIZE.
9. FOR WATER TIGHT SEAL REFER TO MN/DOT S.P. 4007 C.
10. DROP INLET USED FOR SAN. SEWER DROPS GREATER THAN 1.0 FT.
11. MINIMUM CONCRETE THICKNESS AT LOWEST INVERT SHALL BE 1 1/2".
12. STRUCTURE TYPE 3 OR 3A REQUIRED FOR NEW SANITARY SEWER CONSTRUCTION.
13. MAX. PIPE SIZE:
    24" FOR STRAIGHT THRU TO 135°
    18" FOR 90° BEND.
14. DROP PIPE TO BE ENCASED IN CONCRETE IF FLEXIBLE PIPE, OR GRANULAR ENCASEMENT IF DUCTILE IRON PIPE IS USED.

SECTION A–A

TYPE 2A FOR DROP–INLET

DEPARTMENT OF PUBLIC WORKS
CITY OF ROCHESTER, MINNESOTA

STRUCTURE TYPES 2 AND 2A

ASST. CITY ENGINEER	DIRECTOR	DATE REVISED	PLATE NO.	REV.
		4/25/13	1–02	I

SHT 1 OF 1 SHTS

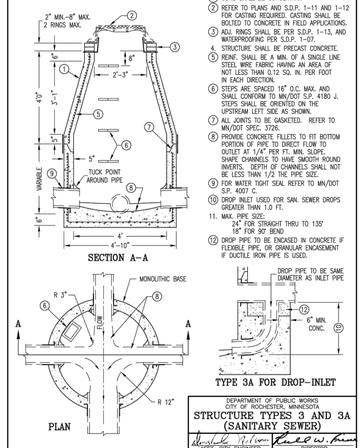

NOTES

1. CONE SHALL BE CONCENTRIC.
2. REFER TO PLANS AND S.D.P. 1–11 AND 1–12 FOR CASTING REQUIRED. CASTING SHALL BE BOLTED TO CONCRETE IN FIELD APPLICATIONS.
3. ADJ. RINGS SHALL BE PER S.D.P. 1–13, AND WATERPROOFING PER S.D.P. 1–07.
4. STRUCTURE SHALL BE PRECAST CONCRETE.
5. REINF. SHALL BE A MIN. OF A SINGLE LINE STEEL WIRE FABRIC HAVING AN AREA OF NOT LESS THAN 0.12 SQ. IN. PER FOOT IN EACH DIRECTION.
6. STEPS ARE SPACED 16" O.C. MAX. AND SHALL CONFORM TO MN/DOT S.P. 4180 J. STEPS SHALL BE ORIENTED ON THE UPSTREAM LEFT SIDE AS SHOWN.
7. ALL JOINTS TO BE GASKETED. REFER TO MN/DOT SPEC. 3726.
8. PROVIDE CONCRETE FILLETS TO FIT BOTTOM PORTION OF PIPE TO DIRECT FLOW TO OUTLET AT 1/4" PER FT. MIN. SLOPE. SHAPE CHANNELS TO HAVE SMOOTH ROUND INVERTS. DEPTH OF CHANNELS SHALL NOT BE LESS THAN 1/2 THE PIPE SIZE.
9. FOR WATER TIGHT SEAL REFER TO MN/DOT S.P. 4007 C.
10. DROP INLET USED FOR SAN. SEWER DROPS GREATER THAN 1.0 FT.
11. MAX. PIPE SIZE:
    24" FOR STRAIGHT THRU TO 135°
    18" FOR 90° BEND.
12. DROP PIPE TO BE ENCASED IN CONCRETE IF FLEXIBLE PIPE, OR GRANULAR ENCASEMENT IF DUCTILE IRON PIPE IS USED.

SECTION A–A

TYPE 3A FOR DROP–INLET

DEPARTMENT OF PUBLIC WORKS
CITY OF ROCHESTER, MINNESOTA

STRUCTURE TYPES 3 AND 3A (SANITARY SEWER)

ASST. CITY ENGINEER	DIRECTOR	DATE REVISED	PLATE NO.	REV.
		4/25/13	1–03	J

SHT 1 OF 1 SHTS

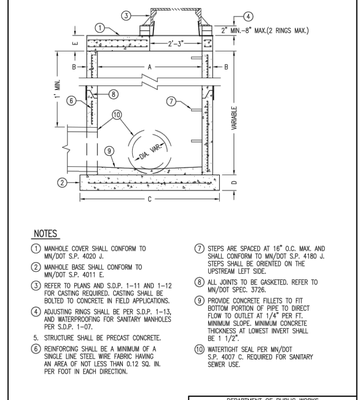

MANHOLE TOP SLAB

ALTERNATE TOP SLAB FOR MANHOLE

MH TOP SLAB				MANHOLE DIMENSIONS					MAX. PIPE SIZE	
W	X	Y	Z	A	B	C	D	E	135°–180°	90°
6"	0"	–	58"	46"	5"	64"	6"	8"	27"	18"
6"	6"	–	65"	54"	5.5"	72"	8"	8"	33"	21"
7"	3"	–	72"	60"	6"	78"	8"	8"	36"	24"
7"	0"	–	79"	66"	6.5"	85"	8"	8"	42"	30"
8"	–	3"	86"	72"	7"	92"	8"	8"	42"	33"
8"	–	6"	93"	78"	7.5"	100"	8"	8"	48"	36"
9"	–	9"	100"	84"	8"	106"	8"	8"	54"	42"
9"	–	12"	107"	90"	8.5"	114"	8"	8"	60"	42"
9"	–	15"	114"	96"	9"	120"	8"	8"	60"	42"
9"	–	18"	121"	102"	9.5"	127"	8"	8"	60"	48"
10"	–	21"	126"	108"	10"	133"	9"	12"	60"	54"
11"	–	24"	140"	120"	10"	146"	12"	12"	60"	60"

NOTES

1. MANHOLE COVER SHALL CONFORM TO MN/DOT S.P. 4020 J.
2. MANHOLE BASE SHALL CONFORM TO MN/DOT S.P. 4011 E.
3. REFER TO PLANS AND S.D.P. 1–11 AND 1–12 FOR CASTING REQUIRED. CASTING SHALL BE BOLTED TO CONCRETE IN FIELD APPLICATIONS.
4. ADJUSTING RINGS SHALL BE PER S.D.P. 1–13, AND WATERPROOFING FOR SANITARY MANHOLES PER S.D.P. 1–07.
5. STRUCTURE SHALL BE PRECAST CONCRETE.
6. REINFORCING SHALL BE A MINIMUM OF A SINGLE LINE STEEL WIRE FABRIC HAVING AN AREA OF NOT LESS THAN 0.12 SQ. IN. PER FOOT IN EACH DIRECTION.
7. STEPS ARE SPACED AT 16" O.C. MAX. AND SHALL CONFORM TO MN/DOT S.P. 4180 J. STEPS SHALL BE ORIENTED ON THE UPSTREAM LEFT SIDE.
8. ALL JOINTS TO BE GASKETED. REFER TO MN/DOT SPEC. 3726.
9. PROVIDE CONCRETE FILLETS TO FIT BOTTOM PORTION OF PIPE TO DIRECT FLOW TO OUTLET AT 1/4" PER FT. MINIMUM SLOPE. MINIMUM CONCRETE THICKNESS AT LOWEST INVERT SHALL BE 1 1/2".
10. WATERTIGHT SEAL PER MN/DOT S.P. 4007 C. REQUIRED FOR SANITARY SEWER USE.

SEE SHEET 2 FOR MANHOLE DIMENSIONS

DEPARTMENT OF PUBLIC WORKS
CITY OF ROCHESTER, MINNESOTA

STRUCTURE TYPE 4 (XX in.)

ASST. CITY ENGINEER	DIRECTOR	DATE REVISED	PLATE NO.	REV.
		4/25/13	1–04	I

SHT 1 OF 2 SHTS

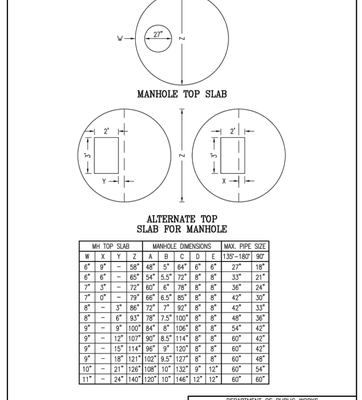

ALTERNATE TOP SLAB FOR MANHOLE

MH TOP SLAB				MANHOLE DIMENSIONS					MAX. PIPE SIZE	
W	X	Y	Z	A	B	C	D	E	135°–180°	90°
6"	0"	–	58"	46"	5"	64"	6"	8"	27"	18"
6"	6"	–	65"	54"	5.5"	72"	8"	8"	33"	21"
7"	3"	–	72"	60"	6"	78"	8"	8"	36"	24"
7"	0"	–	79"	66"	6.5"	85"	8"	8"	42"	30"
8"	–	3"	86"	72"	7"	92"	8"	8"	42"	33"
8"	–	6"	93"	78"	7.5"	100"	8"	8"	48"	36"
9"	–	9"	100"	84"	8"	106"	8"	8"	54"	42"
9"	–	12"	107"	90"	8.5"	114"	8"	8"	60"	42"
9"	–	15"	114"	96"	9"	120"	8"	8"	60"	42"
9"	–	18"	121"	102"	9.5"	127"	8"	8"	60"	48"
10"	–	21"	126"	108"	10"	133"	9"	12"	60"	54"
11"	–	24"	140"	120"	10"	146"	12"	12"	60"	60"

DEPARTMENT OF PUBLIC WORKS
CITY OF ROCHESTER, MINNESOTA

STRUCTURE TYPE 4 (XX in.) MANHOLE DIMENSIONS

ASST. CITY ENGINEER	DIRECTOR	DATE REVISED	PLATE NO.	REV.
		4/25/13	1–04	I

SHT 2 OF 2 SHTS

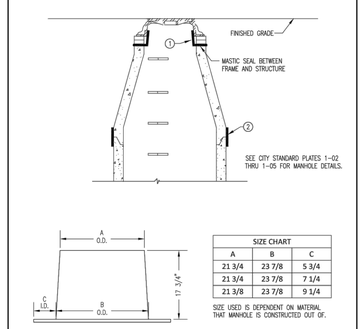

SIZE CHART		
A	B	C
21 3/4	23 7/8	5 3/4
21 3/4	23 7/8	7 1/4
21 3/8	23 7/8	9 1/4

SIZE USED IS DEPENDENT ON MATERIAL THAT MANHOLE IS CONSTRUCTED OUT OF.

INTERNAL WATER BARRIER

NOTES

1. INTERNAL WATER BARRIER PER ASTM D1248
2. 12" EXTERNAL WATER BARRIER WRAP (ALL JOINTS) PER ASTM C877
3. TRIM TOP OF SEAL TO 1" ABOVE TOP OF ADJ. RINGS. CASTING SHOULD NOT REST ON SEAL.
4. PLACE SEALANT ON TOP OF CONE SECTION AND BENEATH SEAL.
5. INSTALL MARKER WHEN MANHOLE IS PLACED OUTSIDE OF THE ROADWAY.

DEPARTMENT OF PUBLIC WORKS
CITY OF ROCHESTER, MINNESOTA

MANHOLE WATERPROOFING PAVED AREAS

ASST. CITY ENGINEER	DIRECTOR	DATE REVISED	PLATE NO.	REV.
		12/1/11	1–07	B

SHT 1 OF 2 SHTS

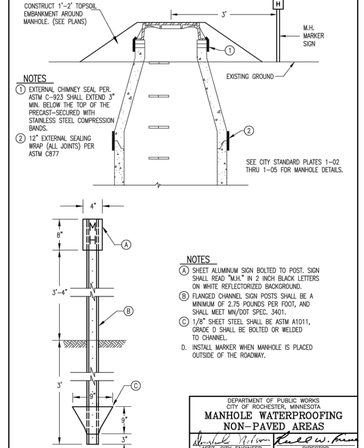

NOTES

1. EXTERNAL CHIMNEY SEAL PER ASTM C–923 SHALL EXTEND 3" MIN. BELOW THE TOP OF THE PRECAST–SECURED WITH STAINLESS STEEL COMPRESSION BANDS.
2. 12" EXTERNAL SEALING WRAP (ALL JOINTS) PER ASTM C877

A. SHEET ALUMINUM SIGN BOLTED TO POST. SIGN SHALL READ "MJA" IN 2 INCH BLACK LETTERS ON WHITE REFLECTORIZED BACKGROUND.
B. FLANGED CHANNEL SIGN POSTS SHALL BE A MINIMUM OF 2.75 POUNDS PER FOOT, AND SHALL MEET MN/DOT SPEC. 3401.
C. 1/8" SHEET STEEL SHALL BE ASTM A1011, GRADE D SHALL BE BOLTED OR WELDED TO CHANNEL.
D. INSTALL MARKER WHEN MANHOLE IS PLACED OUTSIDE OF THE ROADWAY.

DEPARTMENT OF PUBLIC WORKS
CITY OF ROCHESTER, MINNESOTA

MANHOLE WATERPROOFING NON–PAVED AREAS

ASST. CITY ENGINEER	DIRECTOR	DATE REVISED	PLATE NO.	REV.
		12/1/11	1–07	B

SHT 2 OF 2 SHTS

CASTINGS - STRUCTURE TYPE 1

TYPE	DESCRIPTION	MEINAH REF NO	GRATE SLOTS	REMARKS
			DIAGONAL	
BB	3' CURB INLET FRAME, GRATE & BOX	R-3067	00705054C12	USE WHERE DRIVEWAY PRECLUDES A CURB INLET IN SAG
C	3' DRIVEWAY INLET FRAME & GRATE	R-3290-A	00705410	PARALLEL (BICYCLE SAFE)
V	3' CURB INLET FRAME, GRATE & BOX	R-3067	00705051C12	PERPENDICULAR VANE	USE WHEN STREET GRADE EXCEEDS 2%

CASTINGS - OTHER STRUCTURES

TYPE	DESCRIPTION	MEINAH REF NO	E. JORDAN REF NO	COVER/GRATE	REMARKS
1	8" FRAME & COVER-GASKETED	R-1916-C	00704809	SELF-SEALING, BOLTED LID	USED IN FLOOD PRONE AREAS & IN CONCRETE PAVING
2	7" FRAME & COVER-GASKETED	R-1733	00705011	INDENTED TOP	WITH TWO O.A. CONCEALED PICK HOLES
2A	8" FRAME & COVER-GASKETED	R-1733-B	00705012	INDENTED TOP	WITH TWO O.A. CONCEALED PICK HOLES
3	8" FRAME & GRATE-NON ROCKING	R-1733-B	00705017	INDENTED TOP	WITH TWO O.A. CONCEALED PICK HOLES
4	8" FRAME & GRATE-NON ROCKING	R-3253	00705011	INDENTED TOP	60% OPEN AREA FOR BICYCLES
5	DITCH GRATE-STOOL TYPE-TALL	R-4341-A	00708594	FLAT GRATE	PAVEMENT DRAIN
6	DITCH GRATE-STOOL TYPE-SHORT	R-4342	00708594	STOOL GRATE	HEAVY DUTY
7	DITCH GRATE-STOOL TYPE-SHORT	R-4342	00708594	STOOL GRATE	LIGHT DUTY
8	POND SKIMMER GRATE			1/2" STEEL PLATE	NOT DIPPED GALVANIZED NOT SUBJECT TO CORROSION

NOTES

1. CASTINGS SHALL BE ACCORDING TO MN/DOT SPEC 3281.1–2 SUPPLIED BY FOUNDERS THAT ARE APPROVED ON MN/DOT APPROVED/QUALIFIED PRODUCTS LIST
2. ALL CASTINGS SHALL COMPLY WITH AASHTO M-306
3. ALL CASTINGS SHALL BE MADE IN THE U.S. CODE OF FEDERAL REGULATIONS 23CFR635.410, THE "BUY AMERICAN STEEL & IRON" REGULATION
4. ALL STORM SEWER CASTINGS MAY INCLUDE IMPRINT FISH STAMP AND "DUMP NO WASTE"

DEPARTMENT OF PUBLIC WORKS
CITY OF ROCHESTER, MINNESOTA

CASTING REFERENCE NUMBERS

ASST. CITY ENGINEER	DIRECTOR	DATE REVISED	PLATE NO.	REV.
		4/25/13	1–11	

SHT 1 OF 1 SHTS

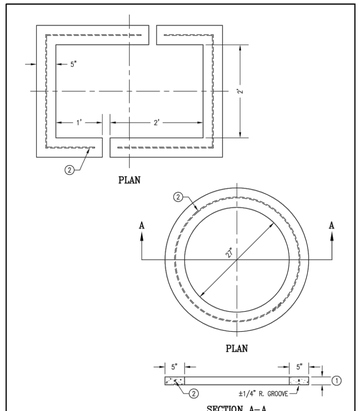

NOTES

1. VARIABLE THICKNESS OF 2" MIN. AND 6" MAX.
2. REINFORCEMENT SHALL BE A SINGLE HOOP OF #8 GAGE STEEL WIRE

DEPARTMENT OF PUBLIC WORKS
CITY OF ROCHESTER, MINNESOTA

CONCRETE STRUCTURE ADJUSTING RINGS

ASST. CITY ENGINEER	DIRECTOR	DATE REVISED	PLATE NO.	REV.
		12/1/11	1–13	C

SHT 1 OF 3 SHTS

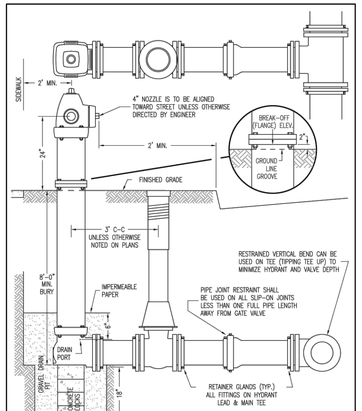

NOTE

CARE MUST BE TAKEN NOT TO PLUG THE HYDRANT DRAIN PORT WITH CONCRETE. DRAIN PORTS TO BE PLUGGED IF REQUIRED BY SPECIAL PROVISIONS.

DEPARTMENT OF PUBLIC WORKS
CITY OF ROCHESTER, MINNESOTA

HYDRANT BRANCH DETAIL

ASST. WATER UTILITY	DIRECTOR	DATE REVISED	PLATE NO.	REV.
		4/25/13	6–04	E

SHT 1 OF 1 SHTS

CONNECTIONS TO EXISTING WATERMAIN

INSTALLATION OF TIE–RODS FOR CONNECTION OF NEW MECHANICAL JOINT FITTINGS TO EXISTING WATERMAINS

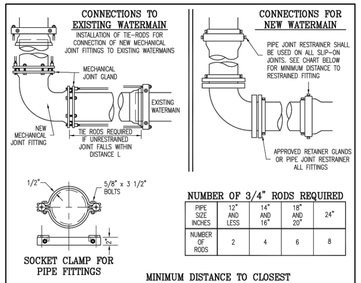

SOCKET CLAMP FOR PIPE FITTINGS

CONNECTIONS FOR NEW WATERMAIN

PIPE JOINT RESTRAINER SHALL BE USED ON ALL SLIP–ON JOINTS. SEE CHART BELOW FOR MINIMUM DISTANCE TO RESTRAINED FITTING

APPROVED RETAINER GLANDS OR PIPE JOINT RESTRAINER ALL FITTINGS

NUMBER OF 3/4" RODS REQUIRED

PIPE SIZE INCHES	12" AND LESS	14" AND 16"	18" AND 20"	24"
NUMBER OF RODS	2	4	6	8

MINIMUM DISTANCE TO CLOSEST UNRESTRAINED JOINT (L IN FEET)

TYPE OF FITTING	PIPE SIZE							
	6"	8"	10"	12"	14"	16"	18"	20"
11 1/4° BEND	18.0	18.0	18.0	18.0	18.0	18.0	18.0	18.0
22 1/2° BEND	18.0	18.0	18.0	18.0	18.0	18.0	18.0	18.0
45° BEND	18.0	18.0	18.0	18.0	19.0	21.4	23.8	26.0
90° BEND	19.6	19.6	24.0	28.2	32.4	36.6	40.8	44.8
TEE	18.0	18.0	18.0	18.0	20.0	25.0	36.0	40.0
PLUG	18.0	18.0	18.0	18.0	20.0	25.0	36.0	40.0

NOTES

1. RODS TO BE GALVANIZED.

DEPARTMENT OF PUBLIC WORKS
CITY OF ROCHESTER, MINNESOTA

RESTRAINED JOINT DETAIL

ASST. WATER UTILITY	DIRECTOR	DATE REVISED	PLATE NO.	REV.
		12/1/11	6–05	D

SHT 1 OF 1 SHTS

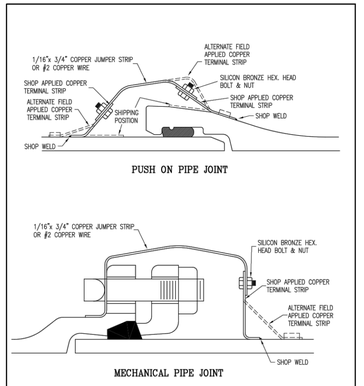

PUSH ON PIPE JOINT

MECHANICAL PIPE JOINT

DEPARTMENT OF PUBLIC WORKS
CITY OF ROCHESTER, MINNESOTA

ELECTRICAL CONDUCTIVITY

ASST. WATER UTILITY	DIRECTOR	DATE REVISED	PLATE NO.	REV.
		4/16/01	6–08	B

SHT 1 OF 1 SHTS

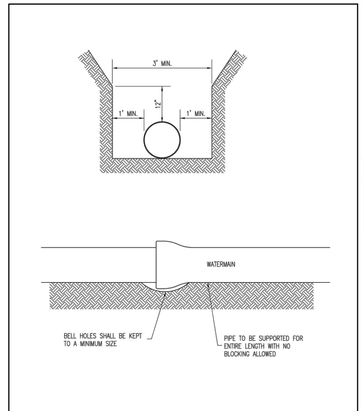

DEPARTMENT OF PUBLIC WORKS
CITY OF ROCHESTER, MINNESOTA

INSTALLATION DETAIL

ASST. WATER UTILITY	DIRECTOR	DATE REVISED	PLATE NO.	REV.
		10/1/97	6–09	A

SHT 1 OF 1 SHTS

INSULATION REQUIREMENTS

DEPTH (4)	SAN. SEWER	WATER–MAIN (2)
4'–5'	4"	4"
5'–7'	2"	2"
>7'	0	0

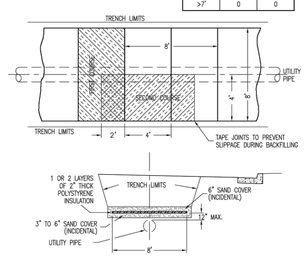

TYPICAL LAYOUT FOR POLYSTYRENE INSULATION

NOTES

1. INSULATION BOARD SHALL BE AS PER MN/DOT SPEC. 3760.
2. FOR WATERMAIN WITH NO SERVICE CONNECTIONS OR FOR WATERMAIN OUTSIDE OF PAVED AREAS WHERE SNOW IS NOT REMOVED, NO INSULATION IS REQUIRED IF COVER IS AT LEAST 6'.
3. INSULATION BOARD SHALL BE PAID FOR AS 2503.604 2" INSULATION AT THE PRICE BID PER SQ. YD.
4. DEPTH FOR SANITARY AND STORM SHALL BE TO INVERT. DEPTH FOR WATERMAIN SHALL BE TO TOP OF PIPE. LESS THAN 4' REQUIRES CONCRETE INSULATION. SEE S.D.P. 5–01.

DEPARTMENT OF PUBLIC WORKS
CITY OF ROCHESTER, MINNESOTA

POLYSTYRENE INSULATION

ASST. CITY ENGINEER	DIRECTOR	DATE REVISED	PLATE NO.	REV.
		3/22/06	5–02	D

SHT 1 OF 1 SHTS

James R. Hill, Inc.
PLANNERS / ENGINEERS / SURVEYORS
2500 W. Cty. Rd. 42, Suite 120, Burnsville, MN 55337
PHONE: (952)890–6044 FAX: (952)890–6244

I hereby certify that this plan, specification, or report was prepared by me or under my direct supervision and that I am a duly Licensed Professional Engineer under the laws of the State of Minnesota.

JOEL G. COOPER

Date: 03/29/16 Reg.No. 18495

HINDU SAMAJ TEMPLE

ROCHESTER, MINNESOTA

DETAILS

FOR

HINDU–SAMAJ TEMPLE OF MINNESOTA, INC.

911 11TH AVENUE NW, ROCHESTER, MN 55901

DRAWN BY	EPF
DATE	04/19/16
REVISIONS	
CAD FILE	23262–D
PROJECT NO.	23262
	C6.1

F:_Civil 3D Projects\23262\PRE–PLAT PLANS\23262–D.dwg – 4/20/2016 09:00AM

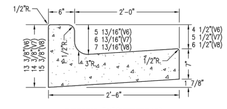

DESIGN "V"(VERTICAL)

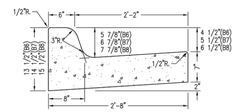

DESIGN "B"(BATTERFACE)

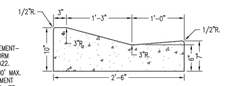

DESIGN "D"(DRIVEOVER)

NOTES

1. CONCRETE MIX: MANUAL PLACEMENT–MN/DOT SPEC. 3A32, SLIP–FORM PLACEMENT–MN/DOT SPEC. 3A22.
2. PROVIDE 1/2" EXP. JT. AT 300' MAX. SPACING AND TO MATCH PAVEMENT EXP. JTS. IN ADDITION TO EXP. JTS. SHOWN ON OTHER DETAIL PLATES.
3. PROVIDE CONTRACTION JTS. @ 9' MAX. SPACING, SAW CUT 2" MIN. DEPTH.
4. ALL CONC. C. & G. SHALL BE PLACED ON A MIN. OF 4" AGGREGATE BASE.
5. SILL REQUIRED FOR DESIGN "V" AND "B", WHEREVER SIDEWALK ABUTS CURB. SEE S.D.P. 2–02.

DEPARTMENT OF PUBLIC WORKS
CITY OF ROCHESTER, MINNESOTA

CONCRETE CURB & GUTTER

ASST. CITY ENGINEER	DIRECTOR		
SHT 1 OF 1 SHTS	DATE REVISED 4/25/13	PLATE NO. 2–01	REV. E

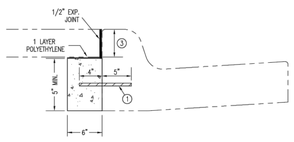

MODIFIED B624 CURB & GUTTER
MODIFIED V624 CURB & GUTTER (SIMILAR)

NOTES

1. TIE SILL AT 3'-0" CENTERS WITH 9" x #13 REINFORCING BARS OR POUR INTEGRALLY WITH CURB.
2. TO BE USED AT ALL CURB RETURNS AND WHERE SIDEWALK ABUTS CURB & GUTTER.
3. DIMENSION TO BE SAME AS SIDEWALK THICKNESS, 5" MIN.

DEPARTMENT OF PUBLIC WORKS
CITY OF ROCHESTER, MINNESOTA

CONCRETE SILL

ASST. CITY ENGINEER	DIRECTOR		
SHT 1 OF 1 SHTS	DATE REVISED 4/25/13	PLATE NO. 2–02	REV. E

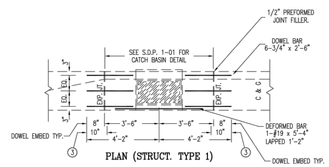

PLAN (STRUCT. TYPE 1)

NOTES

1. DOWEL BARS SHALL BE PER MN/DOT SPEC. 3302 (EPOXY COATED).
2. DEFORMED BAR SHALL BE PER MN/DOT SPEC. 3301 (EPOXY COATED).
3. COAT THE DOWEL BARS WITH A THIN UNIFORM COATING OF AN APPROVED FORM COATING MATERIAL MEETING MN/DOT SPEC. 3902. NOT MORE THAN ONE HOUR BEFORE COVERING WITH CONCRETE, OR WRAP WITH TEFLON TAPE.

DEPARTMENT OF PUBLIC WORKS
CITY OF ROCHESTER, MINNESOTA

CURB & GUTTER REINFORCEMENT AT CATCH BASINS

ASST. CITY ENGINEER	DIRECTOR		
SHT 1 OF 1 SHTS	DATE REVISED 4/25/13	PLATE NO. 2–06	REV. D

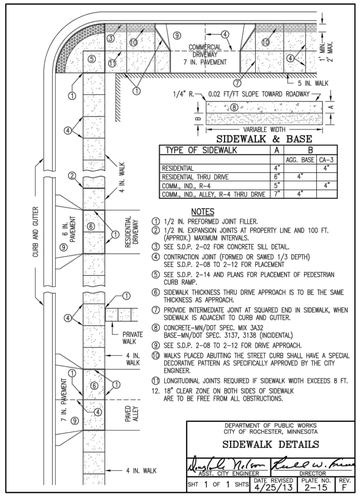

SIDEWALK & BASE

TYPE OF SIDEWALK	A	B
	AGG. BASE	CA–3
RESIDENTIAL	4"	4"
RESIDENTIAL THRU DRIVE	6"	4"
COMM., IND., R–4	5"	4"
COMM., IND., ALLEY, R–4 THRU DRIVE	7"	4"

NOTES

1. 1/2 IN. PREFORMED JOINT FILLER.
2. 1/2 IN. EXPANSION JOINTS AT PROPERTY LINE AND 100 FT. (APPROX.) MAXIMUM INTERVALS.
3. SEE S.D.P. 2–02 FOR CONCRETE SILL DETAIL.
4. CONTRACTION JOINT (FORMED OR SAWED 1/3 DEPTH) SEE S.D.P. 2–08 TO 2–12 FOR PLACEMENT
5. SEE S.D.P. 2–14 AND PLANS FOR PLACEMENT OF PEDESTRIAN CURB RAMP.
6. SIDEWALK THICKNESS THRU DRIVE APPROACH IS TO BE THE SAME THICKNESS AS APPROACH.
7. PROVIDE INTERMEDIATE JOINT AT SQUARED END IN SIDEWALK, WHEN SIDEWALK IS ADJACENT TO CURB AND GUTTER.
8. CONCRETE–MN/DOT SPEC. MIX 3A32 BASE–MN/DOT SPEC. 3137, 3138 (INCIDENTAL)
9. SEE S.D.P. 2–08 TO 2–12 FOR DRIVE APPROACH.
10. WALKS PLACED ABUTTING THE STREET CURB SHALL HAVE A SPECIAL DECORATIVE PATTERN AS SPECIFICALLY APPROVED BY THE CITY ENGINEER.
11. LONGITUDINAL JOINTS REQUIRED IF SIDEWALK WIDTH EXCEEDS 8 FT.
12. 18" CLEAR ZONE ON BOTH SIDES OF SIDEWALK ARE TO BE FREE FROM ALL OBSTRUCTIONS.

DEPARTMENT OF PUBLIC WORKS
CITY OF ROCHESTER, MINNESOTA

SIDEWALK DETAILS

ASST. CITY ENGINEER	DIRECTOR		
SHT 1 OF 1 SHTS	DATE REVISED 4/25/13	PLATE NO. 2–15	REV. F

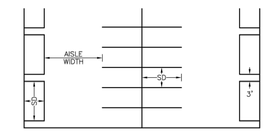

STALL DIMENSIONS (SD)		
SIZE OF CAR	SHORT TERM	LONG TERM
SMALL	7'6"x15'0"	7'3"x15'0"
STANDARD	8'8"x17'0"	8'4"x17'0"

AISLE WIDTH									
	ONE–WAY				TWO–WAY				
SIZE OF CAR	PAR.	30°	45°	60°	90°	PAR.	30°	45°	60°	90°
SMALL	8'	8'	10'	12'	15'	14'	14'	16'	18'	18'
STANDARD	10'	10'	12'	18'	22'	21'	21'	23'	25'	25'

DEPARTMENT OF PUBLIC WORKS
CITY OF ROCHESTER, MINNESOTA

PARKING STALL DIMENSIONS PARALLEL PARKING

ASST. CITY ENGINEER	DIRECTOR		
SHT 1 OF 5 SHTS	DATE REVISED 12/1/11	PLATE NO. 8–01	REV. A

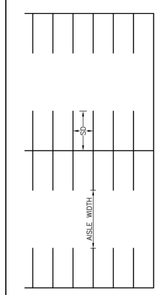

STALL DIMENSIONS (SD)		
SIZE OF CAR	SHORT TERM	LONG TERM
SMALL	7'6"x15'0"	7'3"x15'0"
STANDARD	8'8"x17'0"	8'4"x17'0"

AISLE WIDTH		
SIZE OF CAR	ONE–WAY	TWO–WAY
SMALL	15 FT.	18 FT.
STANDARD	22 FT.	25 FT.

DEPARTMENT OF PUBLIC WORKS
CITY OF ROCHESTER, MINNESOTA

PARKING STALL DIMENSIONS 90° PARKING

ASST. CITY ENGINEER	DIRECTOR		
SHT 5 OF 5 SHTS	DATE REVISED 12/1/11	PLATE NO. 8–01	REV. A

INSULATION REQUIREMENTS

DEPTH ④	SAN. SEWER	WATER–MAIN ②
4'–5'	4"	4"
5'–7'	2"	2"
>7'	0	0

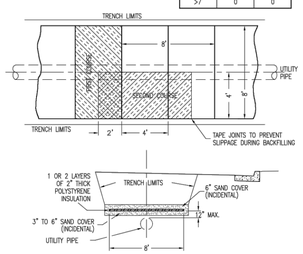

TYPICAL LAYOUT FOR POLYSTYRENE INSULATION

NOTES

1. INSULATION BOARD SHALL BE AS PER MN/DOT SPEC. 3760.
2. FOR WATERMAIN WITH NO SERVICE CONNECTIONS OR FOR WATERMAIN OUTSIDE OF PAVED AREAS WHERE SNOW IS NOT REMOVED, NO INSULATION IS REQUIRED IF COVER IS AT LEAST 6'.
3. INSULATION BOARD SHALL BE PAID FOR AS 2503.604 2" INSULATION AT THE PRICE BID PER SQ. YD.
4. DEPTH FOR SANITARY AND STORM SHALL BE TO INVERT. DEPTH FOR WATERMAIN SHALL BE TO TOP OF PIPE, LESS THAN 4' REQUIRES CONCRETE INSULATION. SEE S.D.P. 5–01.

DEPARTMENT OF PUBLIC WORKS
CITY OF ROCHESTER, MINNESOTA

POLYSTYRENE INSULATION

ASST. CITY ENGINEER	DIRECTOR		
SHT 1 OF 1 SHTS	DATE REVISED 3/22/06	PLATE NO. 5–02	REV. D

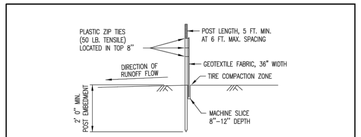

STANDARD MACHINE SLICED

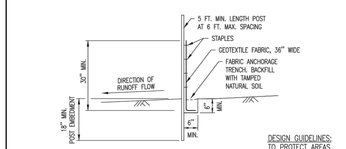

PREASSEMBLED

DESIGN GUIDELINES:
TO PROTECT AREAS FROM SHEET FLOW. MAXIMUM CONTRIBUTING AREA: 1 ACRE

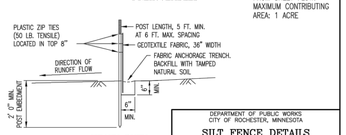

HEAVY DUTY
(HAND INSTALLED)

REFERENCE: MN/DOT SPEC. 3886

DEPARTMENT OF PUBLIC WORKS
CITY OF ROCHESTER, MINNESOTA

SILT FENCE DETAILS

ASST. CITY ENGINEER	DIRECTOR		
SHT 1 OF 2 SHTS	DATE REVISED 6/15/07	PLATE NO. 7–01	REV. B

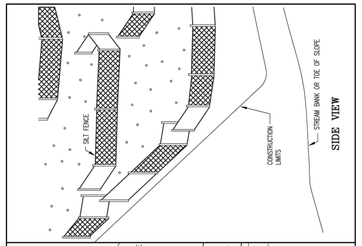

SIDE VIEW

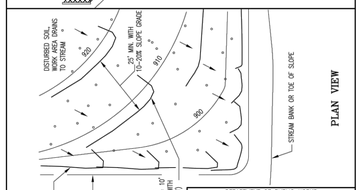

PLAN VIEW

DEPARTMENT OF PUBLIC WORKS
CITY OF ROCHESTER, MINNESOTA

SILT FENCE DETAILS– J–HOOK INSTALLATION

ASST. CITY ENGINEER	DIRECTOR		
SHT 2 OF 2 SHTS	DATE REVISED 6/15/07	PLATE NO. 7–01	REV. B

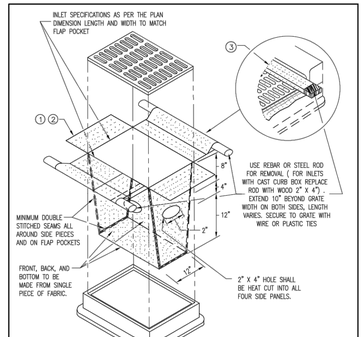

NOTES

1. ALL GEOTEXTILE USED FOR INLET PROTECTION SHALL BE MONOFILAMENT IN BOTH DIRECTIONS, MEETING SPEC. 3886.
2. FINISHED SIZE, INCLUDING POCKETS WHERE REQUIRED SHALL EXTEND A MINIMUM OF 10 INCHES AROUND THE PERIMETER TO FACILITATE MAINTENANCE OR REMOVAL.
3. FLAP POCKETS SHALL BE LARGE ENOUGH TO ACCEPT WOOD 2 IN. X 4 INCH OR USE A ROCK SOCK OR SAND BAGS IN PLACE OF THE ROCK SOCK AND WOOD 2 IN. x 4 INCH.
4. INSTALLATION NOTES: DO NOT INSTALL FILTER BAG INSERT IN INLETS SHALLOWER THAN 30 IN., MEASURED FROM THE BOTTOM OF THE INLET TO THE TOP OF THE GRATE. THE INSTALLED BAG SHALL HAVE A MINIMUM SIDE CLEARANCE OF 3" BETWEEN THE INLET WALLS AND THE BAG MEASURED AT THE BOTTOM OF THE OVERFLOW HOLES. WHERE NECESSARY THE CONTRACTOR SHALL CLINCH THE BAG, USING PLASTIC ZIP TIES, TO ACHIEVE THE 3" SIDE CLEARANCE.

DEPARTMENT OF PUBLIC WORKS
CITY OF ROCHESTER, MINNESOTA

INLET PROTECTION– FILTER BAG INSERT

ASST. CITY ENGINEER	DIRECTOR		
SHT 5 OF 5 SHTS	DATE REVISED 6/15/07	PLATE NO. 7–05	REV. C

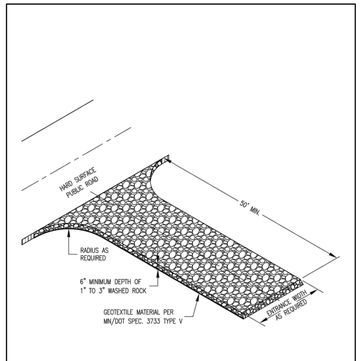

MAINTENANCE (INCIDENTAL)

THE ROCK PAD SHALL BE MAINTAINED TO PREVENT THE TRACKING OF MUD ONTO PAVED ROADS, INCLUDING PERIODIC TOP DRESSING WITH ADDITIONAL ROCK OR REMOVAL AND REINSTALLATION OF THE PAD AS NECESSARY.

DEPARTMENT OF PUBLIC WORKS
CITY OF ROCHESTER, MINNESOTA

TEMPORARY ROCK CONSTRUCTION ENTRANCE

ASST. CITY ENGINEER	DIRECTOR		
SHT 1 OF 1 SHTS	DATE REVISED 3/22/06	PLATE NO. 7–06	REV. D

James R. Hill, Inc.
PLANNERS / ENGINEERS / SURVEYORS
2500 W. Cty. Rd. 42, Suite 120, Burnsville, MN 55337
PHONE: (952)890–6044 FAX: (952)890–6244

I hereby certify that this plan, specification, or report was prepared by me or under my direct supervision and that I am a duly Licensed Professional Engineer under the laws of the State of Minnesota.

JOEL G. COOPER

Date: 03/29/16 Reg.No. 18495

HINDU SAMAJ TEMPLE

ROCHESTER, MINNESOTA

DETAILS

FOR

HINDU–SAMAJ TEMPLE OF MINNESOTA, INC.

911 11TH AVENUE NW, ROCHESTER, MN 55901

DRAWN BY EPF
DATE 04/19/16
REVISIONS
CAD FILE 23262–D
PROJECT NO. 23262
C6.2

F:_Civil 3D Projects\23262\PRE–PLAT PLANS\23262–D.dwg – 4/20/2016 09:00AM